CHAPTER 6

Other Power & Pneumatic Tools

Chapter Objectives

After completing this chapter, you will be able to:

- **Describe** the uses of different types of drill bits.
- **Demonstrate** how to drill holes in wood and metal.
- **Identify** common uses for routers, sanders, planers, and jointers.
- **Describe** how a plate joiner works.
- **Identify** the uses of fasteners used with pneumatic tools.

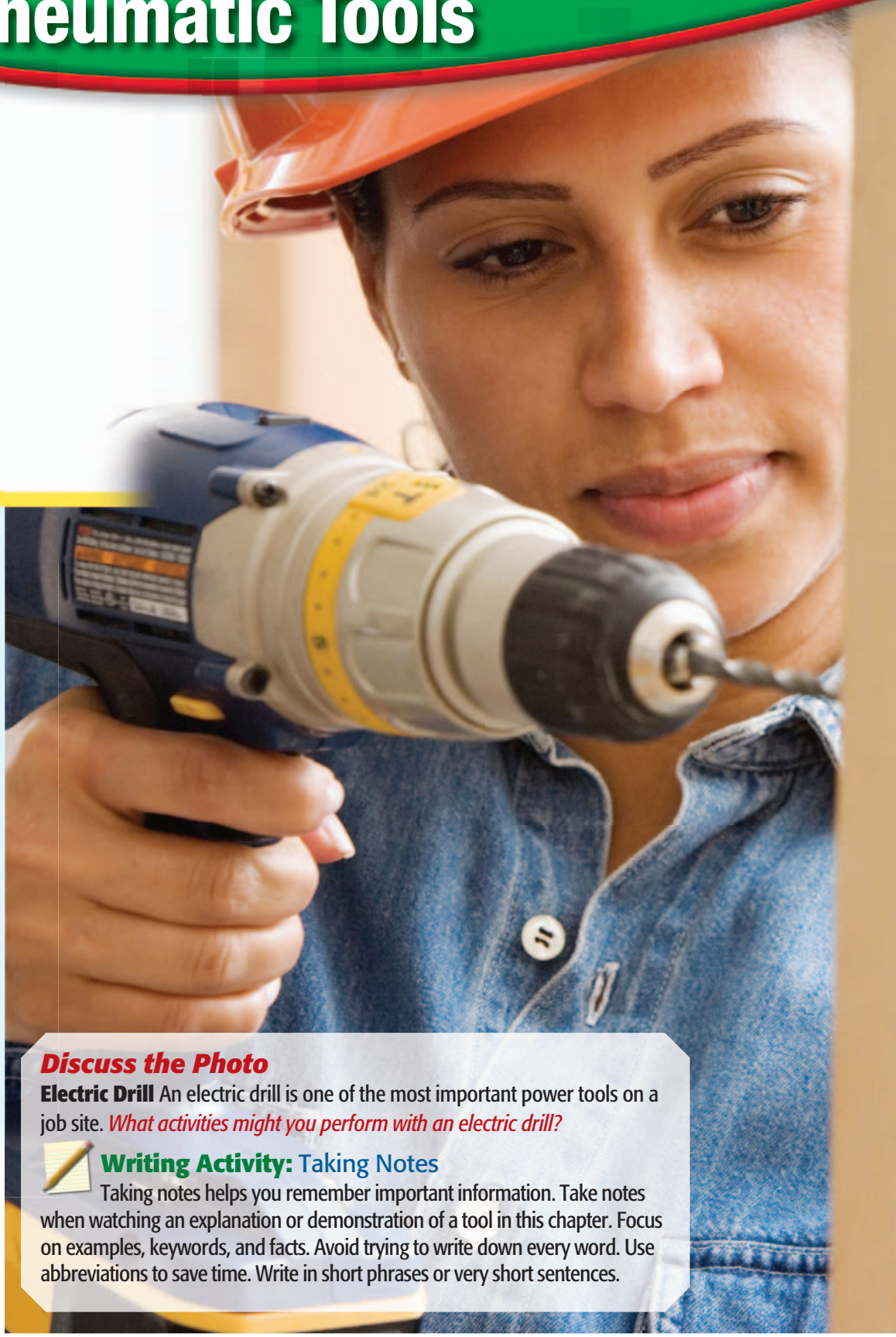

Discuss the Photo

Electric Drill An electric drill is one of the most important power tools on a job site. *What activities might you perform with an electric drill?*

Writing Activity: Taking Notes

Taking notes helps you remember important information. Take notes when watching an explanation or demonstration of a tool in this chapter. Focus on examples, keywords, and facts. Avoid trying to write down every word. Use abbreviations to save time. Write in short phrases or very short sentences.

Chapter 6 Reading Guide

Before You Read Preview

Power and pneumatic tools improve the speed and accuracy of many tasks. Choose a content vocabulary or academic vocabulary word that is new to you. When you find it in the text, write down the definition.

Content Vocabulary

- amperage
- countersink
- pilot hole
- collet
- chamfer
- template
- cutterhead
- biscuit
- pneumatic tool
- regulator
- collated fasteners

Academic Vocabulary

You will find these words in your reading and on your tests. Use the academic vocabulary glossary to look up their definitions if necessary.

- ranges
- approximate
- versatile

Graphic Organizer

As you read, use a chart like the one shown to organize information about power tools and their uses, adding rows as needed.

Power Tool	Used for…
right-angle drill	drilling in tight spaces

Go to glencoe.com for this book's OLC for a downloadable version of this graphic organizer.

Academic Standards

English Language Arts

Use different writing process elements to communicate effectively (NCTE 5)

Mathematics

Number and Operation: Understand numbers, ways of representing numbers, relationships among numbers, and number systems (NCTM)

Measurement: Apply appropriate techniques, tools, and formulas to determine measurements (NCTM)

Science

Physical Science: Motions and forces (NSES)

Unifying Concepts and Processes: Constancy, change, and measurement (NSES)

Science in Personal and Social Perspectives: Personal and community health (NSES)

Industry Standards

Introduction to Fasteners

Portable Power Tools

NCTE National Council of Teachers of English
NCTM National Council of Teachers of Mathematics
NSES National Science Education Standards

Section 6.1

Drills & Drivers

Drills

What is a grounding plug used for?

The portable electric drill is a versatile power tool. With the right bit, it can be used to drill holes in nearly any material. Fitted with various accessories, it can be used to install screws, cut holes, mix paints, and do many other jobs.

A typical builder or contractor will often have several electric drills on the job site. One will usually serve as a general-duty tool for drilling small and medium-size holes. The others might include a heavy-duty model for jobs requiring extra power, a drill/driver for installing screws, and a hammer drill for drilling into masonry. One or more of these drills may be battery-powered drills.

The major parts of an electric drill are shown in **Figure 6-1**. The most common sizes of electric drills used in construction are ⅜" and ½". These dimensions refer to the diameter of the shank for the largest drill bit the chuck can hold. The *shank* is the end of the drill bit that fits into the chuck. The *chuck* is a device that has three jaws that can be tightened around the shank of a drill bit to hold it securely. Many drills, particularly heavy-duty drills, have a key-type chuck. Some drills have a keyless chuck, which can be conveniently tightened by hand. Most drills have a pistol-grip handle.

Types of Drills

The two basic types of electric drills are corded drills and cordless drills. Older drills have a housing made of metal. Their power cord is fitted with a three-prong grounding plug to reduce the danger of electrical shock. Drills with a plastic housing typically have a two-prong plug because the housing itself insulates the operator against shock. Plastic housings are sometimes referred to as *double-insulated* housings. Many other types of power tools have plastic housings as well.

Most electric drills can be operated at various speeds. Speed control is important when drilling metal and when using the drill to start screws. The speed of a drill is controlled by finger pressure on the drill's trigger. Drill speed is rated in rpm (revolutions per minute), and typically **ranges** from 0 to 1,200 rpm. Speeds up to 900 rpm usually indicate a heavy-duty drill capable of providing great torque. *Torque* is a twisting force that produces rotation.

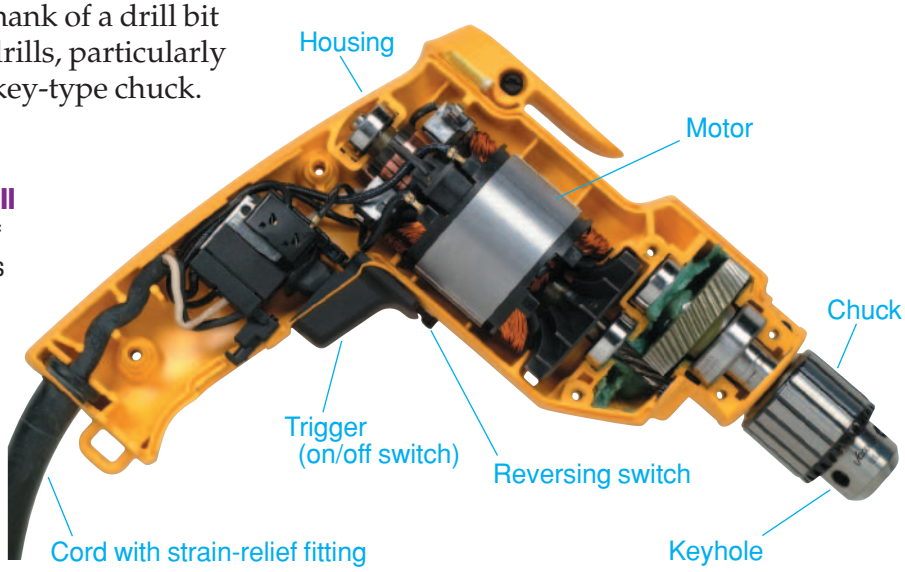

Figure 6-1 Parts of a Drill
Main Parts The main parts of a corded electric drill. Cordless drills include a rechargeable battery instead of a power cord. *What is the advantage of having a cordless drill?*

Some drills have an adjustable internal clutch, and are called *drill/drivers.* The clutch allows the tool to operate at 2 torque settings, one for drilling and one for driving screws. This allows it to drive screws more effectively than standard variable-speed drills.

Corded Drills A standard corded electric drill should be plugged into a properly grounded electrical outlet. These drills are best for drilling small and large holes, for drilling through difficult materials such as steel or concrete, and for drilling many holes in a short period of time.

Amperage is the strength of an electric current expressed in *amperes,* or *amps*. The amperage of an electric drill is an **approximate** measure of its power. The amperage rating is on a small metal specification plate permanently attached to the tool. Corded drills generally range from 3 to 8 amps. High-amperage drills are used for heavy-duty work.

There are various types of specialized corded drills. *Hammer drills* such as the one in **Figure 6-2** are used to drill holes in masonry. While the chuck revolves, the drill creates a rapid, hammerlike, reciprocating action. This helps to drive a masonry bit into the material. For drilling larger holes (⅜" and up), an SDS type drill (a heavy duty hammer drill using a specialized chuck and bits) is more effective.

JOB SAFETY

ELECTRIC DRILLS The following are general safety rules for electric drills. Check the owner's manual for any special safety instructions.

- Wear proper eye protection.
- Tie back long hair.
- When operating larger drills, use both hands and, if necessary, an auxiliary handle.
- Disconnect the power plug or remove the battery pack before installing or removing drill bits.
- Center the drill bit in the chuck and tighten the chuck securely. Make certain the drill bit is held securely in the chuck.
- Never use a bit with a square, tapered tang in an electric drill. The drill's chuck will not hold this type of bit securely.
- Be sure the chuck key has been removed before starting the drill.
- Do not force the drill into any material. Use an even, steady pressure.
- Never drill through cloth. It will twist around the bit.
- Do not hold small pieces of material with your fingers. Clamp them down to prevent them from spinning as they are being drilled.
- Put the drill down with the drill bit facing away from you. When laying down the drill, always point the drill bit away from you, even when it is coasting to a stop.
- Keep loose clothing or long hair away from the spinning bit, as they may become entangled very quickly.

Go to **glencoe.com** for this book's OLC for more on job safety.

Figure 6-2 Hammer Drill
Drilling Masonry The auxiliary handle allows better control of the tool. The stop rod limits the depth of the hole.

Courtesy of Makita USA Inc.

Figure 6-3 A Right-Angle Drill
Cramped Quarters The position of the chuck makes this drill able to reach into places other drills cannot. *What parts are similar to a standard drill?*

Right-angle drills such as the one in **Figure 6-3** are often used by electricians and plumbers. On such drills, the chuck is at 90° to the drill body. This allows drilling in tight spaces, such as through the sides of studs.

Cordless Drills Cordless electric drills such as the one in **Figure 6-4** are powered by a rechargeable battery. They are especially useful where a long extension cord would be undesirable or where electrical power is not available. The voltage of the battery roughly indicates the tool's power. Batteries typically range from 9.6 to 18 volts, but some models go up to 28 volts. Batteries with a higher voltage can operate longer between charges. However, the added capacity also makes the battery heavier. Recent improvements in battery technology have made cordless tools even more effective and useful.

Figure 6-4 A Cordless Drill/Driver
Portable Power Advanced battery technology makes this tool lighter yet more powerful than previous models with the same battery voltage.

The batteries are sealed within a plastic case inside or at the end of the drill's handle. The case and batteries form a unit called the battery pack. To charge the batteries, the battery pack is removed from the drill and placed in a charger. Full battery strength can be restored in one hour or less. Most builders keep two or more battery packs on hand. While one is recharging, the other is in use.

Build It Green The battery in any cordless power tool must be replaced eventually. Many batteries contain toxic chemicals that can enter the water supply if disposed of improperly. Always recycle old batteries. Check your owner's manual or contact the tool manufacturer to locate a recycling center.

Drill/Drivers A drill/driver is the best type of drill for driving screws, though a variable speed drill can also do the job. A drill/driver can be adjusted to two different speed ranges. The slower range is for driving screws while the faster range is for drilling. The adjustable clutch inside the tool reduces the chance that a screw will be driven too deeply. The clutch automatically disengages the drive mechanism at a preset level of resistance. Drill/drivers are particularly useful when many screws must be driven. They are most often used to drive Phillips-head and square-drive screws.

A screwdriving bit that is too small or too large for the screw head will spin out, or cam out when power is applied to the drill. The tip must fit snugly, with no sloppiness in the fit.

Courtesy of Makita USA Inc.

Drive screws as follows:

1. Start the screw at a slow speed.
2. Increase speed as the screw moves into the stock.
3. Stop the drill when the screw reaches the correct depth. Some drills have adjustable settings that prevent you from driving the screw too deep. Do not disengage the driving bit while it is spinning.
4. For precise control, drive the screw nearly all the way in and then finish with a screwdriver.

Drill Bits

The versatility of an electric drill comes from the great number and variety of bits, cutters, and other accessories that are available. Knowing when to use a particular bit is the key to getting the best results when using a drill. Common types of bits are shown in **Figure 6-5**. Twist bits and spade bits are used most often on a job site.

- A *twist bit* is a **versatile** bit that can be used to drill holes in wood, plastic, or metal. Common diameters range from

Figure 6-5 Drill Bits

Common Types Any bit shown here is available in various lengths and diameters.

A Twist Bit

B Spade Bit

C Brad-Point Bit

D Auger Bit

E Masonry Bit

F Forstner Bit

G Hole Saws

The one on the left is mounted on an arbor.

1/16" to 1/2", in increments of 1/64". Twist bits with a 118° tip are general utility bits used for drilling holes in wood, metal, and plastic. They have a cylindrical shank, spiral flutes (grooves), and a beveled tip. Twist bits made from high-speed steel (HSS) are particularly suited to drilling metal. A case that holds a group of twist bits in various sizes is called a drill index.

- A *spade bit* is used to bore holes in wood. The holes range in diameter from 3/8" to 1½". A large point guides the bit. Its horizontal cutting surfaces remove stock. A hexagonal shank reduces slippage.
- A *brad-point bit* has a small center point called a *brad point.* This prevents the bit from wandering as the hole is started. Sharp cutting edges cut very smooth, clean holes in wood.
- An *auger bit* is designed to cut deep holes quickly through wood. A screw point pulls the bit through the stock. Such an auger bit is called a self-feed bit. The wide, deep flutes remove chips efficiently. This bit is often used by electricians.
- A *masonry bit* is for use on brick, concrete, and other masonry materials. It has a beveled carbide tip and wide flutes that carry grit and dust away from the cut. If using a masonry bit in a hammer drill, be sure the bit is designed for use in a hammer drill.

Builder's Tip

CHECKING BITS A twist bit that is bent will cut an irregular hole and may not be safe to use. Check the straightness of the bit by spinning it in the drill briefly before drilling. The tip of a bent bit will wobble noticeably. A bit may also be rolled on a flat surface to check for straightness. Always discard drill bits that are even slightly bent.

- A *Forstner bit* has a brad point and a sharpened rim. It is excellent for boring smooth holes with flat bottoms in wood. Forstner bits can bore through end grain with ease. They are used primarily in cabinetmaking.
- A *hole saw* is a cylindrical metal sleeve with a sawtooth edge. It is commonly used by plumbers to cut large holes in wood framing for drain and vent piping. It is also used when installing a door lockset. A twist bit at the center of a hole saw centers the hole.

In many cases, the head of a screw must be flush with the surface of the wood. The screw head must be recessed as shown in **Figure 6-6**. A **countersink** is a special bit with beveled cutting edges. It creates a funnel shape called a countersink at the top of a drilled hole. This funnel shape allows the head of a wood screw to be flush with the wood surface. An 82° countersink is suitable for use with wood screws.

A *combination bit* is another convenient tool for countersinking wood screws. It will drill a pilot hole and countersink in one operation. A **pilot hole** is a hole drilled in wood to start and guide a screw. Combination bits are available in most of the common wood

Builder's Tip

USING A HOLE SAW When drilling with a hole saw, all the teeth should contact the wood at the same time. This ensures that the hole will be perpendicular to the surface of the wood. A hole saw may cause considerable tear out as it exits the back of the material. If both surfaces require a clean hole, advance the hole saw only until the center (pilot) bit exits, then withdraw the hole saw and start drilling from the other side, placing the pilot bit in the same hole to ensure that the finished holes line up.

screw sizes. For example, if a 1" #8 wood screw is used, a 1" #8 combination bit should be used.

Drilling Techniques

Drilling a hole properly is one of the most important skills a builder can develop. Though it might seem easy, drilling a hole that is perpendicular to the wood surface is a skill that takes practice. The most important factor in correct drilling is to choose a suitable bit for the material and the job to be done. An unsuitable bit will deliver poor results, could be damaged, and may be unsafe.

Installing and Removing a Bit To install or remove a bit, follow this basic procedure:

1. Unplug the drill or remove its battery pack.
2. Determine if the shank of the chosen drill bit will fit into the chuck. (A ⅜" chuck, for example, will not accept a ½" shank.)
3. Open the jaws of the chuck by twisting its collar.
4. Insert the shank of the bit as far as possible. Then turn the collar by hand to close the jaws. Check that the shank is centered between the jaws. If not, open the jaws and center it.
5. Tighten the chuck by inserting the chuck key in each of the three keyholes in succession. Remove the chuck key.
6. If the drill has a keyless chuck, twist the two portions of the sleeve in opposite directions until the jaws are tight.

Figure 6-6 Countersinking a Screw
Making a Recess A countersink is designed to cut a funnel-shaped opening.

Builder's Tip

TIGHTENING A CHUCK In most cases, a keyed chuck can be tightened by inserting the key in one hole. For maximum holding power, manufacturers recommend inserting the key in each hole and tightening it. This improves the gripping power of the chuck jaws.

7. The friction of drilling creates heat in a bit. Allow a bit to cool before removing it from the drill. To remove a bit, unplug the drill or remove the battery. Then open the chuck.

Drilling a Hole Hold the drill at a right angle to the work when starting a hole, as shown in **Figure 6-7**. If the workpiece is too small to hold, clamp it down. Make sure you are using a sharp bit, and that it is centered securely in the chuck. Apply just enough pressure on the drill to keep the bit cutting.

Figure 6-7 Drilling a Hole
Drilling in Flat Stock Be sure to hold the drill at a right angle to the workpiece. If necessary, use a clamp or vise to hold the wood securely.

Too little pressure will dull the bit; too much pressure may break it. Do not move the drill from side to side as this may snap the bit. When the hole is complete, withdraw the drill with bit still spinning. When drilling a deep hole, periodically withdraw the bit and keep it spinning to clear shavings from the hole.

Drilling in Wood If it is important to prevent the underside of wood from splintering as the bit breaks through, clamp a piece of scrap wood behind the workpiece. Use this technique when drilling through hardwoods or cabinet-grade plywood.

When installing screws, drill a pilot hole first unless you are using self-drilling screws. Drill the correct-size pilot hole for the screw you are using. If the hole is too small, the screw will be hard to drive and may snap as it is driven. If the hole is too large, the screw will not hold.

When drilling hardwood, it is good practice to bore the pilot hole the same size as the root diameter of the screw. Diameters for common wood screws are shown in **Table 6-1**. In softwood, drill the pilot hole slightly smaller. Self-drilling screws, such as drywall screws, do not usually require a pilot hole when used in softwoods.

Table 6-1: Sizing Holes for Wood Screws

Gauge		2	3	4	5	6	7	8	9	10	12	14
Head-bore size		11/64"	13/64"	15/64"	1/4"	9/32"	5/16"	11/32"	23/64"	25/64"	7/16"	1/2"
Shank-hole size		3/32"	3/32"	7/64"	1/8"	9/64"	5/32"	5/32"	11/64"	3/16"	7/32"	1/4"
Pilot-hole size	Hardwood	1/16"	1/16"	5/64"	5/64"	3/32"	7/64"	7/64"	1/8"	1/8"	9/64"	5/32"
	Softwood	1/16"	1/16"	1/16"	1/16"	5/64"	3/32"	3/32"	7/64"	7/64"	1/8"	9/64"
Available Lengths												
Phillips-head point size		#1			#2						#3	
Square-drive bit size		#0			#1			#2			#3	

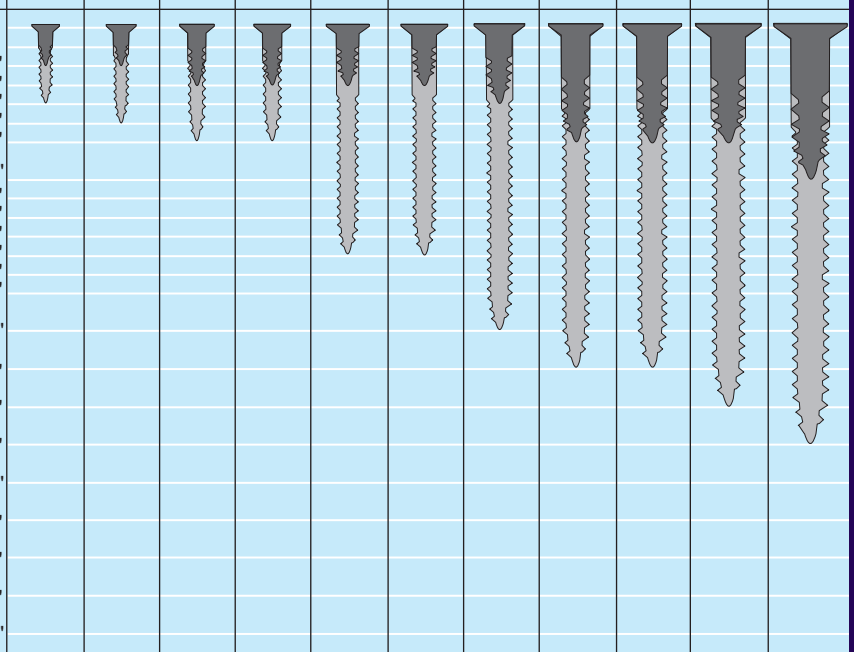

When fastening two pieces of wood together, drill the pilot hole through the uppermost piece and into the bottom piece to the desired depth. Then drill a slightly larger hole through the uppermost piece. This hole is for the screw's shank (fully threaded screws do not require this second hole). Countersink the top of the shank hole.

Drilling in Metal A twist bit with a 135° split point is best for drilling metals. Drilling into stainless steel, cast iron, and some types of aluminum will quickly dull a twist bit. A cutting lubricant such as light-weight oil will cool the bit and extend its life. When drilling without lubricant, reduce the drill's rpm to prevent the bit from overheating.

Push firmly on the drill as it cuts, but do not force it. Just before the bit emerges from the metal, slow the feed rate to prevent the bit from catching on burrs.

Reading Check

Recall *What is the correct angle to hold the drill to the workpiece when drilling a hole?*

Impact Drivers

What are impact drivers best used for?

A cordless impact driver is a relatively new tool for builders, but it has quickly become very popular. The tool shown in **Figure 6-8** looks like a drill, but instead of an adjustable chuck it has a hex chuck. The chuck accepts only bits and drivers with hexagonal shanks. Though the tool can be used to drill holes, its primary purpose is to drive and remove screws and bolts. Deck builders use impact drivers to drive the lag screws that hold beams and posts together. Carpenters use them to drive many kinds of screws, particularly those that are long or

Builder's Tip

MAKING STRONG CONNECTIONS The strength of a connection made with a screw is improved more by increasing the length of the screw than by increasing its diameter.

Mathematics: Calculating Torque

Working with Formulas Torque is the force that causes an object to rotate. It consists of force acting on distance. Torque is measured in pound-feet (lb-ft) and may exist even if no movement occurs. Calculate the torque produced by a 65-pound force pushing on a 3" lever.

Starting Hint Torque is calculated by multiplying force by distance:

$$T = F \times D$$

Figure 6-8 An Impact Driver
Good for Driving Impact drivers are extremely effective at driving and removing screws and hex-head fasteners such as lag screws.

large. Impact drivers are also ideal for driving masonry screws. The tool is most often fitted with driving bits for Phillips head and square-head screws, masonry bits, and nutsetter bits.

The chuck of an impact driver spins just like the chuck of a drill. However, as the chuck spins, the drive mechanism applies a rapid series of blows to the back of the driver bit. This combination dramatically reduces the amount of force required to drive the screw. In fact, most workers using the tool for the first time use too much force.

Section 6.1 Assessment

After You Read: Self-Check

1. In what units is the power of an electric drill measured?
2. What characteristic of masonry bits serves a similar purpose on auger bits?
3. For what type of drilling is a Forstner bit best suited?
4. What is the purpose of a countersink?

Academic Integration: Science

5. **Ohm's Law** Electrical engineers must calculate the amount of electrical current flowing through the wires of tools they design. To do this, they use an equation called Ohm's Law. Ohm's law is **V** = **IR**, where **V** = voltage (measured in volts), **I** = current (measured in amperes), and **R** = resistance (measured in ohms). To understand this equation, think of electricity like water in a hose: The *voltage* is the water pressure in the hose, the *current* is the rate at which the water flows, and the *resistance* is the size of the hose. What is the current of a 30 volt machine that is operated across a wire that has a resistance of 10 ohms?

Go to **glencoe.com** for this book's OLC to check your answers.

Section 6.2 Routers

Understanding Routers

What work is a router used for?

The router is a portable electric tool designed to turn a sharpened cutter, called a *bit,* at high speed. The router is used primarily for finishing work, such as for cutting joints and shaping the surfaces and edges of stock. With accessories, a router can also be used to trim plastic laminate and cut openings in panel products.

Parts of a Router

There are two basic types of router. The motor and base of a *fixed-base router* always remain stationary during a cut. However, prior to cutting, the depth of cut can be adjusted by raising or lowering the base. A *plunge router,* shown in **Figure 6-9**, has a motor that is mounted on vertical metal posts. The motor assembly slides up and down on the posts. This allows the spinning

Figure 6-9 A Plunge Router

Motor on Posts A plunge router is one type of router. It is similar to a fixed-base router but is better suited to some types of work, such as making stop cuts and repetitive cuts at several different depths. This one has an electric brake as a safety feature.

bit to be "plunged" into the workpiece and lifted away when the work is complete.

On some routers, the on/off switch is on the body of the tool. On other routers, it is on one of the handles. A handle-mounted switch makes it possible to turn off the tool without letting go of the handles. This is a good safety feature.

The **collet** is the part of the router that holds the bit. Routers are classified by the diameter of their collet. Thus, a ½" router is a router with a ½" collet. This determines the size of the bit shank the router will accept. Some routers come with interchangeable collets. These allow the routers to accept different sizes of bits.

A router motor is designed to deliver high speed rather than high torque. Router speeds range from 10,000 to over 25,000 rpm. (In contrast, an electric drill may have a top speed of only 1,200 rpm.) A variable-speed router allows the user to adjust the speed to suit the material being cut and the size of the bit. Bits over 1" in diameter should be used at slower speeds. This improves safety and reduces the chance of damaging the stock.

Router Bits The cutting edges of most router bits are on the sides, rather than on the end. One important exception is the plunge-cutting bit. This bit has cutting edges on its sides and on its end. With a plunge-cutting bit in place, a router can drill a pilot hole and then cut or trim material starting from that hole. Router bits are available either with high-speed-steel cutting edges or with carbide-tipped edges. Carbide-tipped bits are generally more expensive and fragile, but remain sharp longer.

Router bits come in many shapes for doing grooved or decorative work on the surface or on the edge of stock. Some of the most common bits are shown in **Figure 6-10** on page 172, including straight, roundover, beading, cove, and chamfer bits. A **chamfer** is a beveled edge. The shank of a router bit commonly has a diameter of ¼", ⅜", or ½".

Figure 6-10 Router Bits

Common Profiles These are a few of the most common router bits available.

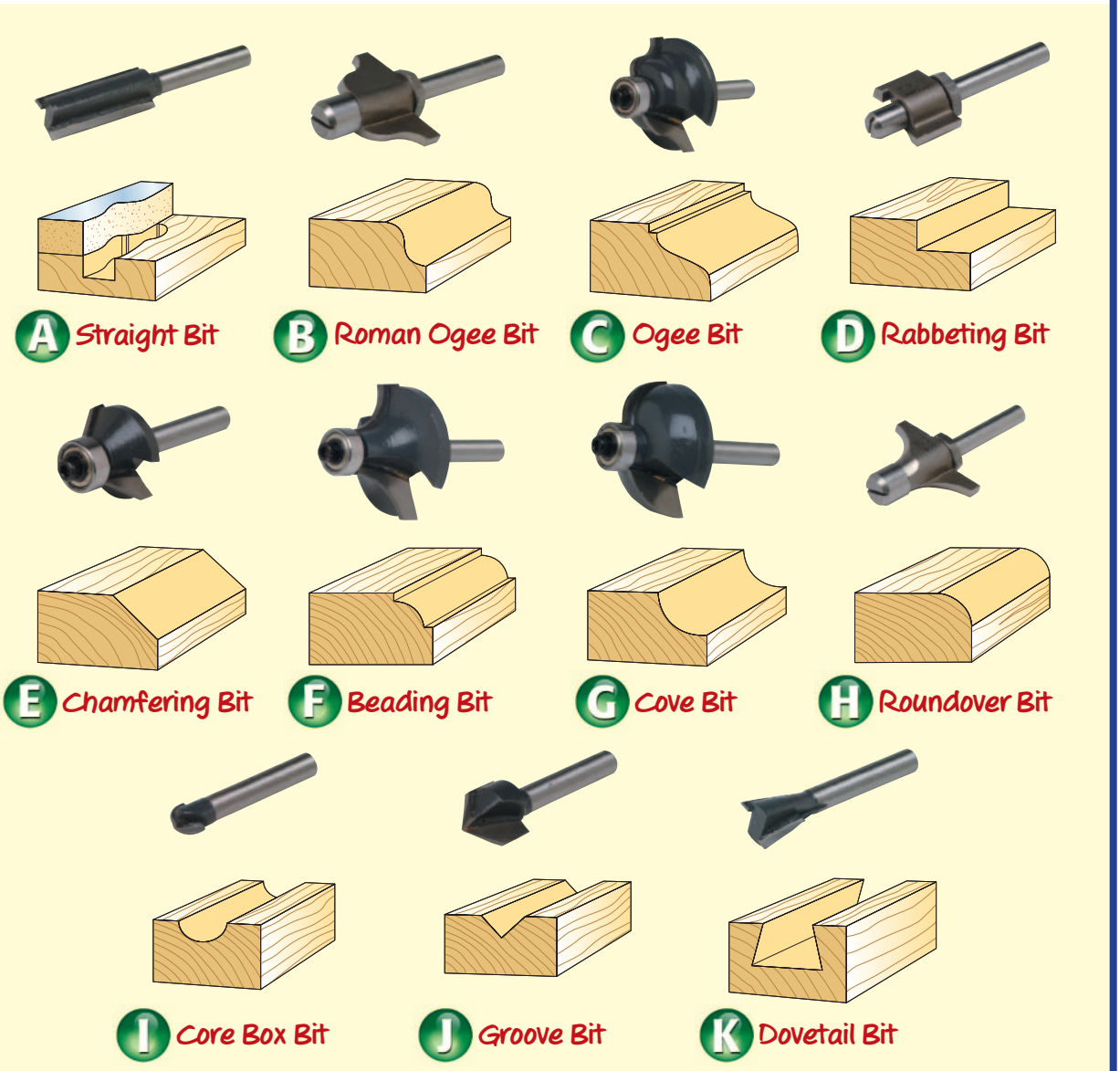

Bits that accept a bearing can be fitted with bearings of different sizes. It is common for many builders to keep several different diameters of bearings on hand. The bearing can be used to change the profile, width, or depth of the cut, as shown in **Figure 6-11**.

If a bearing is mounted on the side of the bit, the combination is called a *bearing-over bit*. If the bearing is mounted on the end, the combination is called a *bearing-under bit*. One example of a bearing-under bit is the flush-trimming bit shown in **Figure 6-12**. It is used to trim plastic laminate.

Accessories

A number of router accessories are available. An edge guide rides against the edge of the stock, enabling the router to make a cut exactly parallel to the edge. A **template** is a guide made from metal or thin wood. Templates enable the router to quickly and accurately cut *mortises* (holes, grooves, or

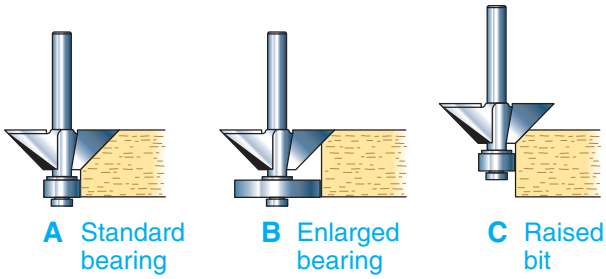

Figure 6-11 Router Bit Bearings
Effects of a Bearing **A.** A bearing controls the depth of cut by holding the bit away from the wood. **B.** Changing the bearing's size changes the size of the cut. **C.** The size can also be changed by raising or lowering the bit.

slots) for door hinges and other shapes. A router can also be controlled using a circle guide or a straightedge, such as the one shown in **Figure 6-13**.

A dovetail template, shown in **Figure 6-14** on page 174, allows the user to cut a dovetail joint. A dovetail joint has interlocking pieces. Dovetail joints are used to assemble the drawers in high-quality cabinetry.

Some carpenters mount a router upside-down beneath a sheet of plywood or particleboard. The bit extends through a hole in the board. When a simple fence is added, this device is called a *router table.* In this case, the stock is moved past the cutter, rather than the cutter being moved along the stock.

A dust collection hose, connected to a shop vacuum cleaner, removes chips and dust. This allows the operator to see the cut more clearly. It also helps prevent chips from flying at the operator, which increases safety.

Reading Check

Define *What is a template?*

Figure 6-13 Guiding a Router
Using a Straightedge A wood or metal straightedge clamped to the workpiece can be used to guide a router.

Using a Router

What causes a bit to overheat?

A router bit turns clockwise. Always feed against the direction of bit rotation, as shown in **Figure 6-15** on page 174. This reduces the tendency of the bit to "grab" the stock, which can make the router difficult to control. In addition, moving the router in the proper way improves the quality of the cut.

The speed at which the best cut is made will depend on the depth and width of the cut and on the hardness of the wood. If you move the router too quickly, the motor will slow down too much, making a poor cut. If you move the router too slowly, the bit may overheat. This can draw the temper from the cutting edge

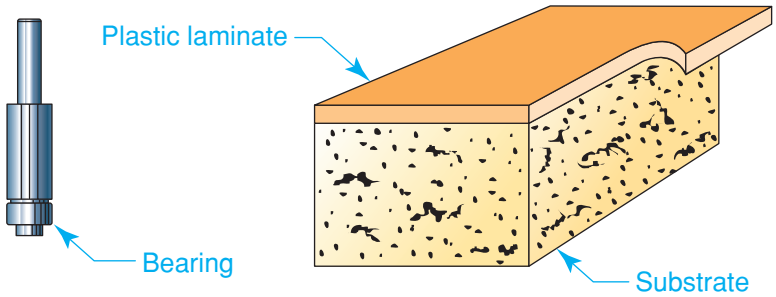

Figure 6-12 A Bearing-Under Bit
Flush Trimming Bit This type of bit is often used when building countertops. As the bearing rides against the substrate, the bit trims off excess plastic laminate.

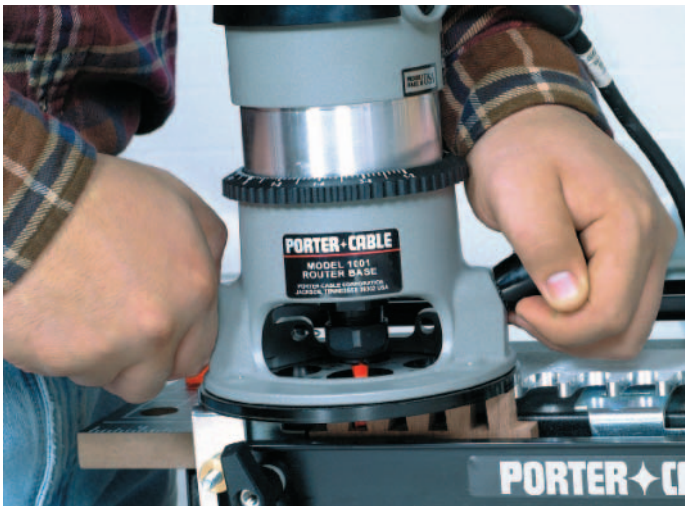

Figure 6-14 A Fixed-Base Router
Cutting Dovetails This router is being used with a dovetail template to shape the end of a drawer side. *Would this router be better for this joint than a plunge router? Why?*

or burn the wood. Do not force the cut. Allow the bit to cut freely. Listen to the motor for an indication of whether it is working at its most efficient speed.

Always make deep cuts in several passes. This is when a plunge router becomes especially useful. It can be quickly reset to several depths.

JOB SAFETY

ROUTER SAFETY The following are general safety rules for using routers. Check the owner's manual for any special safety instructions.

- Always wear proper eye protection.
- Wear hearing protection and a dust mask. Routers generate a lot of noise and sawdust.
- Be certain the power switch is off before plugging the router into an outlet. Always hold on to the router when turning it on.
- Make certain any fence or guide is securely clamped.
- Make certain the workpiece is securely clamped.
- When using the router, keep a firm grip, using both hands when appropriate.
- Make adjustments only when the bit is at a dead stop. When installing or removing bits, be sure the router is unplugged.
- Feed the router in the correct direction. Feeding the router generally means moving in a counter-clockwise direction around the outside perimeter of the piece being routed, and moving clockwise around anything being routed on the interior. Feeding the router is explained further on this page.
- When putting the router down, point the bit away from you. Be aware of a bit that is still moving.
- When using large bits, remove the stock with two or more passes.
- Never use a dull or damaged bit.
- Bring the router to full speed before cutting. Turn off the router after making the cut.

Go to **glencoe.com** for this book's OLC for more on job safety.

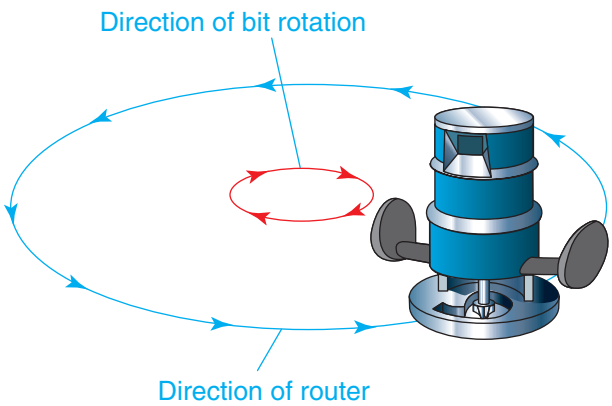

Figure 6-15 Bit Rotation

Feed Direction The router bit spins clockwise. Move the router counterclockwise when cutting outside edges. Move the router clockwise when routing inside edges.

Installing a Bit

The shank of a bit is held by the router collet. When installing a router bit, take care not to cut yourself with its sharp edges.

1. Disconnect the power cord.
2. Turn the router upside down. Depending on the kind of router, either lock the shaft or hold it with a wrench.
3. Slide the bit's shank all the way into the collet. Then back it off slightly and tighten the collet. A bit resting against the bottom of the collet will vibrate and loosen. It can also be difficult to remove.
4. Tighten the collet firmly with a wrench.

Builder's Tip

PILOT TIP BITS Some router bits used for edging have a solid pilot tip that rides against the uncut edge of the wood, instead of a bearing. Always keep the router moving when using a bit with a pilot tip. Otherwise, the heat generated from friction as the tip spins against the edge of the wood may scorch the wood.

Cutting a Decorative Edge Different decorative edges can be created using the many different bits (see Figure 6-10 on page 172).

1. Install the required bit.
2. Adjust the bit to the approximate depth of cut.
3. Plug in the router and turn it on. Resist the starting torque of the motor by holding onto the router with both hands. Otherwise, it can twist out of your grip.
4. Make a test cut in a scrap piece of the same stock.
5. Adjust the depth of cut until the correct profile is obtained.
6. Make the final cut in the correct direction and at the appropriate feed rate.

Section 6.2 Assessment

After You Read: Self-Check

1. How is a plunge router different from a fixed-base router?
2. What bit is used to trim plastic laminate to size?
3. What accessory might be used for cutting a groove parallel to the edge of a plywood panel?
4. Why should you hold the router firmly when turning it on?

Academic Integration: Science

5. **Friction** Friction is the force that comes from two surfaces moving against one another. When these surfaces move against one another, the friction between the surfaces changes the energy of movement (*kinetic energy*) into heat (*thermal energy*). Give an example of friction found in this section.

Go to **glencoe.com** for this book's OLC to check your answers.

Section 6.3

Sanders & Surfacing Tools

Sanders

What is a belt sander used for?

Portable electric sanders are used for tasks ranging from heavy stock removal to delicate finish sanding of woodwork. The most common types are the belt sander, the pad or orbital sander, and the random-orbit sander.

Belt Sanders

The portable belt sander drives a revolving abrasive belt to remove stock quickly. The machine, shown in **Figure 6-16**, is classified by the width and length of its belt. For example, a small machine with a belt that is 3" wide and 18" in circumference would be referred to as a 3"×18" sander. Other sizes include 3"×21", 3"×24", and 4"×24". Each sander must be fitted with a belt of matching size. To reduce the amount of dust in the air, most belt sanders have a dust collection bag. The sander can also be connected to a vacuum system.

Installing the Belt Many sanding belts have a lap seam. If installed improperly, this type of belt can rip apart during use. There is an arrow on the inside surface of this kind of belt. The belt must be installed so that the arrow points in the same direction as the arrow on the side of the sander. "Seamless" belts are constructed differently. They can be installed in either direction. To install a new belt:

1. Unplug the sander.
2. Disengage the belt-release lever and remove the old belt.
3. If you are using a lap-seam belt, be sure the new one is turned in the right direction.
4. Slip the new belt onto the rollers and engage the belt-release lever.
5. Plug in the sander and turn it on. If the belt slides to one side or the other, correct this by turning the belt-tracking knob slightly while the sander is running.

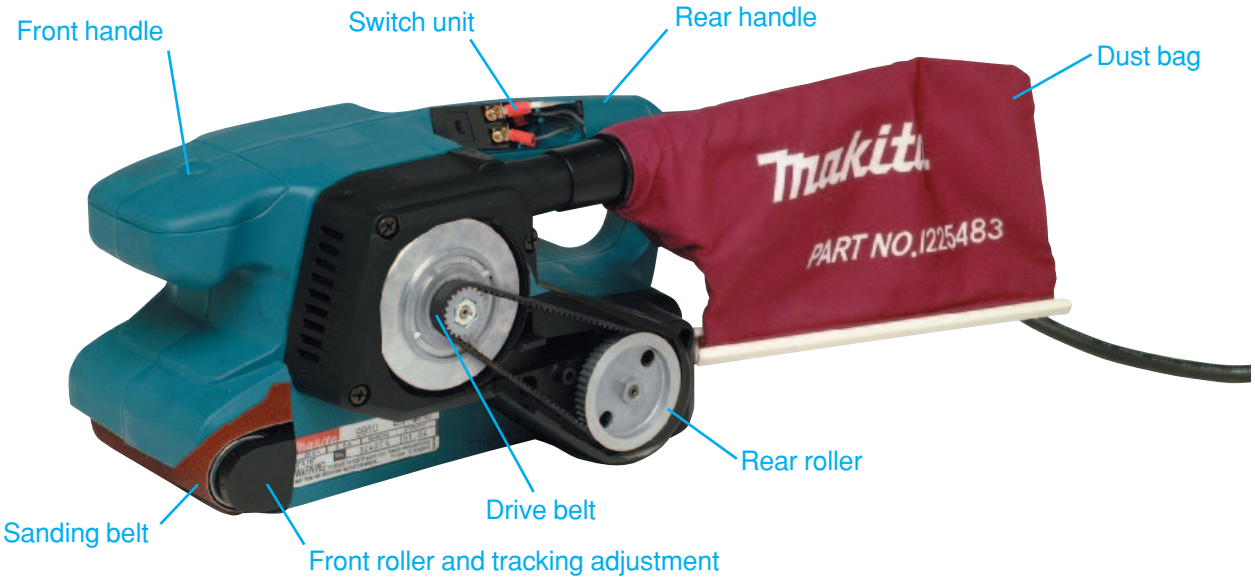

Figure 6-16 Parts of a Belt Sander
Belt Drive Model This cutaway view of a belt sander shows how the rear roller is driven.

Belt Sanding Techniques The portable belt sander is the most powerful of all portable sanders and should be used with care. Used carelessly, it can easily gouge the wood. To prevent this, always keep the tool moving when the belt is in contact with the workpiece. Be sure that the power cord is out of the way before starting the sander. The spinning belt can cut through a cord almost as quickly as a saw-blade can. This tool is generally used to sand in the direction of the wood grain.

1. Hold the sander with both hands and turn it on, as in **Figure 6-17**.
2. Slowly lower the sander onto the wood, letting the heel (rear portion) of the belt touch first.
3. Immediately move the sander either forward and back or from side to side. Never hold it in one place or it will gouge the workpiece. Some belt sanders have the option of using a *surfacing frame.* A surfacing frame is an accessory that surrounds the tool and limits the depth of cut, helping to reduce or eliminate the incidence of gouges.

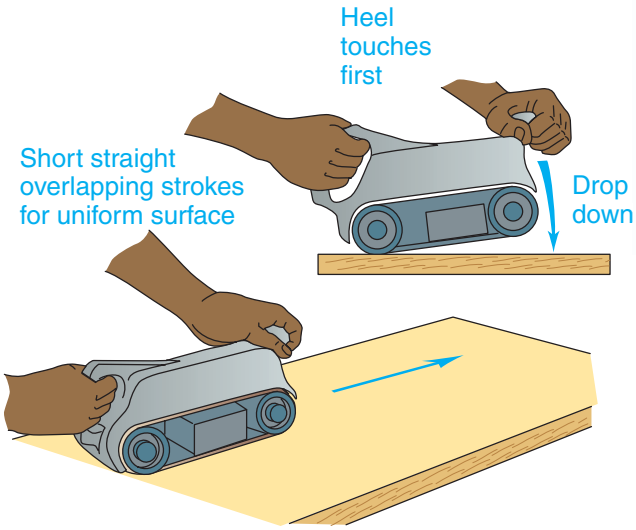

Figure 6-17 Using a Belt Sander
Feed Direction Lower the sander slowly onto the surface, then immediately move the machine in overlapping strokes.

Builder's Tip

CLEANING A BELT A clogged abrasive belt on a belt sander will not work well. Clean a clogged belt by running it against an inexpensive block of crepe rubber designed for this purpose.

Orbital Sanders

An orbital sander uses a sheet of abrasive paper instead of a belt. The paper

JOB SAFETY

POWER SANDER SAFETY The following are general safety rules for using sanders. Check the manufacturer's manual for any special safety instructions.

- Always wear proper eye protection.
- Always wear the proper dust mask or respirator when using sanding equipment.
- Be sure the sander's abrasive belt, disc, or pad is in good condition and that its grit is correct for the work being done.
- Be sure there are no nicks or tears in the edge of a disc or belt. An abrasive belt must be installed with the correct tension. Be sure it is tracking (aligned on the rollers) properly.
- Do not let go of the handles until the belt stops moving.
- Avoid nails and screws when sanding.
- Disconnect the power cord when changing abrasives.
- Make certain the tool's switch is in the off position before plugging in the power cord.
- Never touch a sanding belt or disc while it is moving.
- Do not use a sander to remove paint containing lead (see Chapter 33, "Exterior and Interior Paint").

Go to **glencoe.com** for this book's OLC for more on job safety.

is held in place by paper-locking levers such as those visible in **Figure 6-18**. Some sanders use hook-and-loop or pressure-sensitive adhesive (PSA) systems to hold the sandpaper in place. The sanding pad moves with an orbital (circular) motion. Because orbital sanders are most often used to smooth a surface prior to painting or finishing, they are sometimes called finishing sanders. They are also called *pad sanders* because a rubber pad cushions the abrasive paper.

Orbital sanders are generally classified by the size of the pad, which may be square or rectangular. The pad size is based on standard-size abrasive sheets. Thus, there are *one-quarter-sheet* sanders, *one-third-sheet* sanders, and *one-half-sheet* sanders.

Orbital Sanding Techniques Rest an orbital sander evenly on the stock. Apply moderate pressure and move the sander back and forth, working from one side to the other. When using a standard orbital sander, move the sander in the direction of the wood grain to minimize cross-grain scratching.

Random-Orbit Sanders Some builders prefer a type of orbital sander called a *random-orbit sander.* This versatile tool, shown in **Figure 6-19**, can be used for fine finishing work as well as aggressive stock removal. It usually has a round sanding pad instead of a square one. As the pad spins, it also moves side-to-side. The combination of these two motions reduces visible scratches in the wood surface. You can use a random-orbit sander either with the grain or against it. A similar looking sander, called a *disk sander,* has a pad that spins but does not move side to side. It should not be used where a fine finish is required.

The abrasive paper of a random-orbit sander is attached to the pad by a

JOB SAFETY

DUST REMOVAL A "tool-triggered" shop vacuum can serve as a portable dust collection system when using any sander that has a dust collection hose. When a sander is plugged into the vacuum's on-board electrical receptacle, the vacuum will start and stop whenever the sander starts or stops.

Go to **glencoe.com** for this book's OLC for more on job safety.

Figure 6-18 Parts of an Orbital Sander
Orbital Sander Orbital sanders come in various sizes and forms. They should always be used with a dust bag or a vacuum system.

Figure 6-19 A Random-Orbit Sander
An All-Purpose Sander Random-orbit sanders are designed for use with a shop vacuum.

Arnold & Brown; Courtesy of Makita

pressure-sensitive adhesive (PSA) backing or a hook-and-loop backing. PSA paper cannot be reused once removed but hook-and-loop paper can be reinstalled as often as necessary. This is an advantage when changing back and forth between grits. Holes in the sanding pad and matching holes in the abrasive paper make dust removal easier when the sander is connected to a vacuum system. Breathing quantities of fine sawdust can be hazardous to your health.

Reading Check

Recall *Which portable sander is the most powerful?*

Surfacing Tools

What are surfacing tools used for?

To meet the needs of the construction industry, manufacturers have designed small, portable versions of the surfacing tools common in woodworking shops. These tools, including jointers and planers, are easy to bring to the job site. In addition, builders find that turning rough stock into finished stock on site is sometimes less costly than buying finished stock from a lumberyard.

Figure 6-20 A Jointer
Jointing an Edge This jointer is being used to square the edge of a board to its face.

Jointers

A *jointer* is a power tool used to remove saw marks from stock and ensure a square edge. A jointer is most likely to be used at late stages of house construction, when cabinets and interior woodwork are being installed. The most common use for the jointer on a job site is for jointing an edge, as shown in **Figure 6-20**. An edge is said to be jointed when the edge forms a right angle with the face of the board along its entire length, shown in **Figure 6-21**. A board is sometimes jointed after being cut to width on a table saw. The jointer shown in Figure 6-20 is a model common in small shops. It might also be used on

JOB SAFETY

SURFACING TOOLS The following are general safety rules for using surfacing tools. Check the manufacturer's manual for any special safety instructions.

- Always wear proper eye protection.
- Wear hearing protection, especially when using routers, belt sanders, electric planes, and planers.
- Avoid wearing loose clothing or jewelry that could get caught in the tool. Tie back long hair.
- Protect yourself from inhaling dust by wearing the proper dust mask or respirator. Make sure the tool's dust bag is properly attached. Connect the tool to a vacuum system if possible.
- Always unplug the tool before changing bits, cutters, or belts.
- Make sure bits and cutters are sharp. Be careful when changing or adjusting them. They can cause serious cuts.
- Clamp the workpiece securely to prevent it from vibrating loose or being forcefully ejected.

Go to **glencoe.com** for this book's OLC for more on job safety.

Figure 6-21 A Jointed Edge

Flat and Straight A properly jointed edge is straight along its entire length and forms a 90° angle with the board's face.

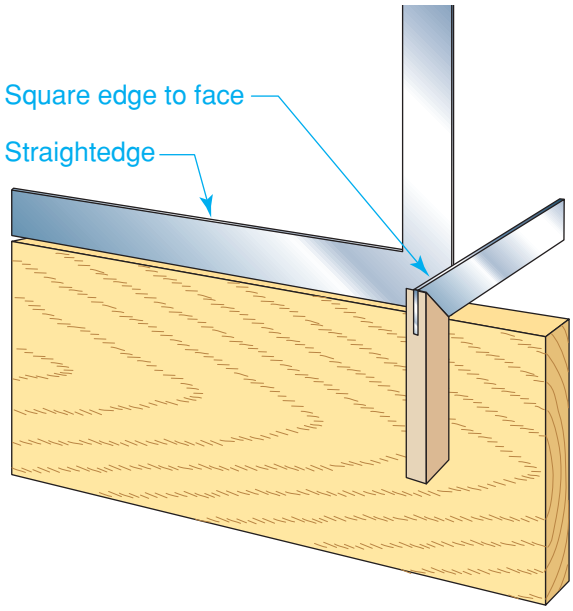

a residential job site if the project calls for large quantities of custom woodwork. Portable jointers are also available for use on smaller projects.

A jointer has a **cutterhead**, a solid metal cylinder on which three or four cutting knives are mounted. The cutterhead is mounted below the bed of the machine. As the cutterhead spins, the knives shear off small chips of wood, producing a smooth surface. A guard covers the cutterhead but swings out of the way to enable stock to pass. Basic jointing operations should always be done with the guard in place.

JOB SAFETY

JOINTER SAFETY The following are general safety rules for using jointers. Check the manufacturer's manual for any special safety instructions.

- Wear proper eye protection.
- Be sure that portable jointers will not tip over during use. They should be secured temporarily to a structure's subfloor or to a workbench.
- Make sure that the guard is in place and operating easily.
- Check the stock for knots, splits, and other imperfections before jointing. Defective stock may break up or be thrown from the jointer.
- Always keep the knives of the jointer sharp. Dull knives tend to cause kick-back. They also result in a poor cut.
- Never adjust the fence or the depth of cut while the jointer is running.
- Because of the danger of kickback, always stand to the side of the jointer, never directly behind it.
- Always allow the machine to come to full speed before using it.
- Always cut with the grain. Always use a pushstick or push block to move stock past the cutterhead. Do not make cuts too deep.
- Do not joint short pieces of wood.
- Use a brush to remove shavings from the table. Never use your hands.

Go to **glencoe.com** for this book's OLC for more on job safety.

A fence guides the stock. The size of a jointer is indicated by its maximum width of cut. A 6" or 8" jointer is common. The length of its bed also affects its usefulness. A longer bed provides better support for jointing longer pieces.

Portable Planers

A *planer* is used to reduce the thickness of a board, smooth its surface, and make one face parallel to another. For example, it might be used to square up stock for stair balusters and other finish work. A planer will not square stock that is not square to start with. The material must first be squared on two sides using a jointer or a table saw. Then the planer can be used to reduce the dimensions of the stock to the final finished size. Large planers are essential in woodworking shops. Portable planers such as the one in **Figure 6-22** are sometimes used on a construction site, especially when much custom woodworking is required.

Like a jointer, a planer has a cylindrical cutterhead fitted with two or more knives.

Figure 6-22 Portable Planer
Board Smoother This 12" portable planer can be moved easily around the job site.

JOB SAFETY

PLANER SAFETY The following are general safety rules for using a portable planer. Check the manufacturer's manual for any special safety instructions.

- Wear proper eye protection.
- Because of the danger of kickback, always stand to the side of the planer, never directly behind it. Never look into the planer when it is running.
- Always provide support at the outfeed side of the planer to support long boards.
- Portable planers are light in weight. Before using one, make sure it is securely fastened to a work surface and will not tip during use.
- Check each board for loose or large knots, warped surfaces, and other flaws that might cause a problem.
- Avoid running used lumber through the planer. The blades can be damaged if they hit a nail or staple. Repairs are time-consuming and expensive.
- Do not force the stock; let the infeed roller pull the stock through. Do not pull stock out of the planer. Support it on the tips of your fingers or on an outfeed table as it leaves the machine.
- Take a series of shallow cuts rather than one deep cut. This is most important when planing hardwoods. A cut that is too deep can damage the stock and overload the planer.
- To be cut safely, a board must engage both the infeed and the outfeed rollers. Therefore, it must be at least several inches longer than the distance between them.

Go to **glencoe.com** for this book's OLC for more on job safety.

JOB SAFETY

PORTABLE ELECTRIC PLANE SAFETY The following are general safety rules. Check the manufacturer's manual for any special safety instructions.

- Wear suitable protection for your eyes and ears.
- Be sure that the blades are sharp. Dull blades result in a poor cut that can be difficult to control.
- Do not allow the workpiece to move or vibrate. Secure it with clamps or in some type of holding device. Do not try to hold it freehand.
- Make adjustments to the plane only when the cord has been disconnected from the power source.
- Use two hands to guide the plane. Stand so you can guide the tool with an uninterrupted cutting motion.
- Do not put an electric plane down until the motor has come to a complete stop.
- As with a manual plane, a power plane should be laid to rest on its side (or upside down) to prevent the sharp blades from coming into contact with anything that could potentially dull them.

Go to **glencoe.com** for this book's OLC for more on job safety.

As the cutterhead rotates, the knives make many small cuts in the surface of a board. This brings the board to a uniform thickness. The cutterhead is mounted above the bed of the machine, as shown in **Figure 6-23**. A powered *infeed roller* moves the stock into the cutterhead. (The *infeed* end of the tool is where stock enters.) Between the infeed roller and the cutterhead is a *chip breaker.* The chip breaker keeps the stock firmly pressed against the bed and prevents tears and splinters. Just beyond the cutterhead is the *pressure bar.* This holds the stock firmly against the bed after the cut is made. An unpowered *outfeed roller* presses against the wood as it exits the machine. (The *outfeed* end of the tool is where stock exits.)

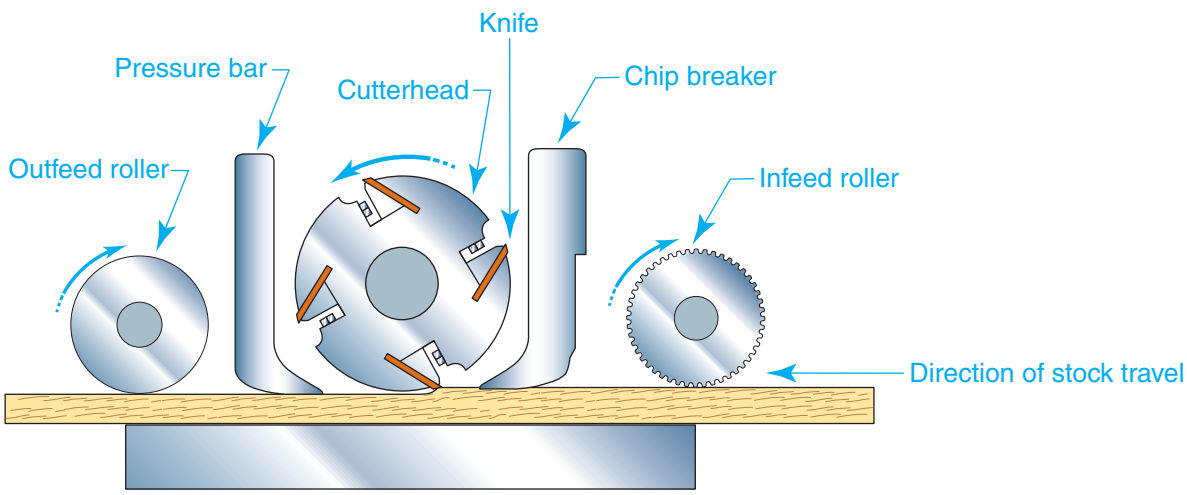

Figure 6-23 How a Planer Works
Planing a Board The basic operation of a planer.

The type and number of controls on a planer vary with its size. All machines, however, have a *handwheel* that moves the bed up and down to control the depth of cut. The size of a planer indicates the size of its bed and the widest board that it can surface. A 12" model can handle boards up to 12" wide.

Portable Electric Plane A portable electric plane, sometimes called a *power plane,* is shown in **Figure 6-24**. It reduces the time and labor needed to plane by hand. It is used to trim or square an edge. Because it makes a smooth and accurate cut, it is useful for installing and trimming doors and paneling. It can also straighten lumber, trim siding, and surface large timbers.

The portable electric plane has a cylindrical cutterhead mounted above the fence and protected by a housing. In many cases, the cutterhead is fitted with three straight blades. Some cutterheads have curved blades mounted in a spiral pattern. These are more difficult to sharpen than straight blades, but they make a very smooth cut. In both cases, the cutterhead revolves toward the front of the tool.

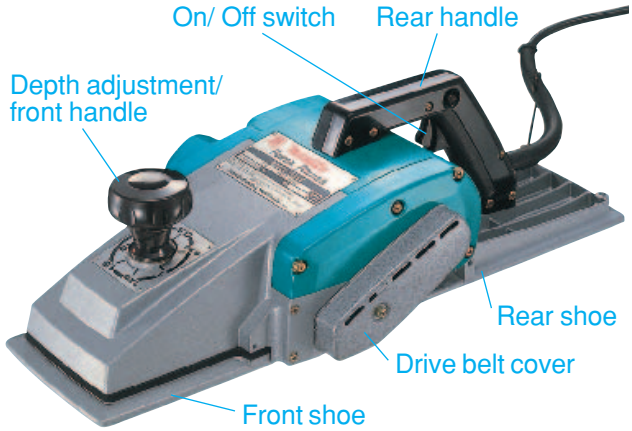

Figure 6-24 Electric Plane
Portable Smoother The main parts of a portable electric plane.

Section 6.3 Assessment

After You Read: Self-Check

1. How is the size of a portable belt sander determined?
2. Describe the proper technique for using a portable belt sander.
3. How is the size of a jointer indicated?
4. How does the position of a cutterhead on a planer compare to its position on a jointer?

Academic Integration: Science

5. **Health Literacy** Mechanical abrasion of wood (cutting, drilling, sanding, and shaping) can release particles of preservative toxins such as arsenic into the air. These toxins can be inhaled, ingested, or absorbed into your skin. Because of the danger of poisoning, arsenic-based preservatives are no longer used in residential carpentry in the United States. Choose one of the safety guidelines in this chapter about reducing sawdust or protecting breathing in the workplace. Create a poster to hang in the shop or in the classroom.

Go to **glencoe.com** for this book's OLC to check your answers.

Courtesy of Makita USA Inc.

Section 6.4

Plate Joiners

Plate Joiner Basics

What is a plate joiner used for?

A *plate joiner,* or *biscuit joiner,* is shown in **Figure 6-25**. It is a portable power tool that cuts crescent-shaped grooves into the edge of a workpiece. Trim carpenters use the tool for such tasks as assembling molding and joining shelves to cabinetry. The tool can also be used for butt-joining custom wood flooring that is not end-matched. It can also be used to strengthen the joints in molding or trim.

A **biscuit**, or plate, is a small, flat piece of compressed wood. After the plate joiner cuts into the wood, biscuits are glued into the crescent-shaped grooves as shown in **Figure 6-26**. The workpiece can then form a joint with another workpiece in which matching grooves have been cut. Biscuits strengthen the joint and help to align the pieces accurately.

The 4" diameter blade of a plate joiner has carbide-tipped teeth. It is powered directly by the motor or by a flexible drive belt. At the front of the tool is a metal faceplate. Small metal anti-kickback pins or rubber pads on the lower portion of the faceplate help to keep the tool from sliding during use. An adjustable fence positions the tool against the workpiece. The fence moves up and down and can be angled as well.

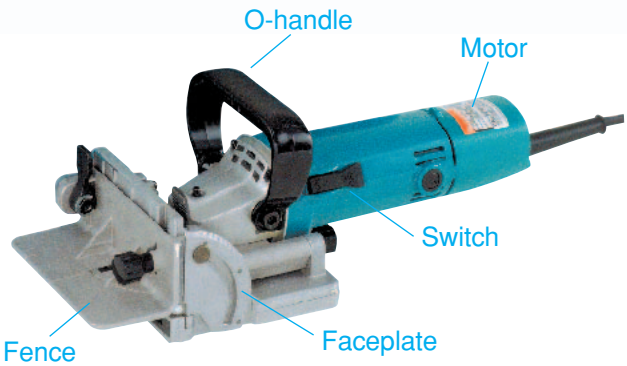

Figure 6-25 A Plate Joiner
Tool for Strong Joints The main parts of a plate joiner.

Biscuits

The small, thin, oval wood biscuits used in plate joinery are die-cut from beech blanks. The grain of each biscuit runs diagonally to

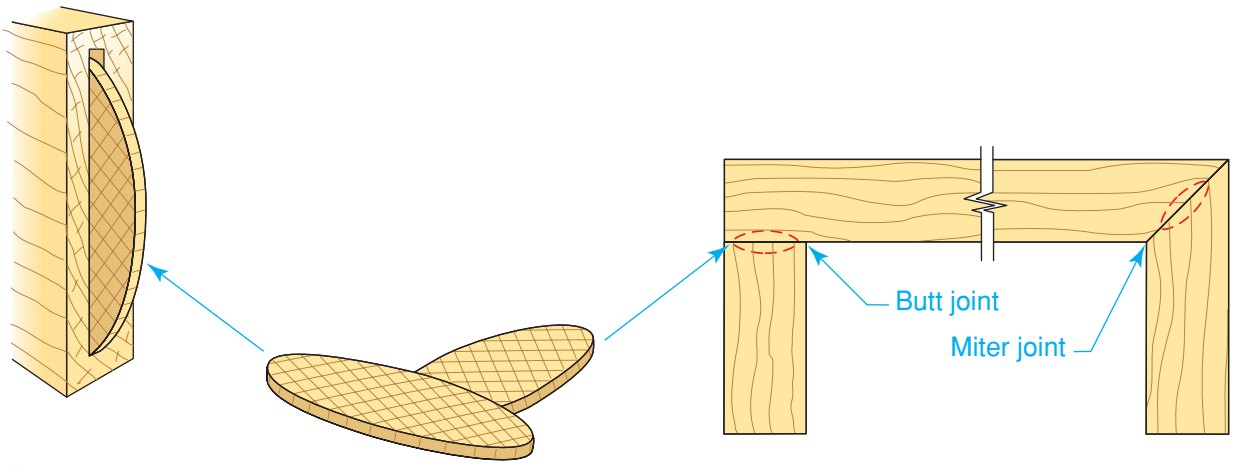

Figure 6-26 Biscuit Joinery
Using Biscuits Biscuits can be used to strengthen the joints in molding and trim.

Courtesy of Makita USA Inc.

its width. This helps it to resist shear forces across the completed joint.

The biscuits are compressed during manufacture. When one is placed in a glued joint, it absorbs moisture from the glue and expands slightly. This makes it fit the joint tightly as the glue dries. Use either white glue or carpenter's glue. Biscuits come in three standard sizes:

- #0 (approximately ⅝" by 1¾")
- #10 (approximately ¾" by 2⅛")
- #20 (approximately 1" by 2½")

Plastic biscuits are available for joining synthetic countertop materials such as Corian. Because plastic biscuits do not absorb moisture from adhesives, they will not expand within the joint. Plastic biscuits are used primarily to speed assembly and to strengthen the joint.

Using a Plate Joiner

The procedure for using a plate joiner is fairly simple. As an example, suppose that two 1×6 boards must be edge-joined to create 10"-wide stock for a closet shelf. You would follow these steps:

1. Place the boards edge to edge.
2. Draw short layout lines across the joint with a pencil. The lines should be 8" to 10" on center.
3. Adjust the joiner's depth of cut for the size of biscuit you wish to use.
4. Adjust the joiner's fence to center the cut in the edge of the board. In the case of 1× stock that is ¾" thick, the center of the cut will be approximately ⅜" from either surface.
5. Clamp one board to the workbench.
6. Use the centerline guide on the tool to align the faceplate with the board's layout marks.
7. Turn on the plate joiner. Bring it to full speed, and push it toward the board. This will plunge the blade into the stock.
8. When the cut is complete, pull the joiner away from the stock and line it up with

JOB SAFETY

PLATE JOINER SAFETY The following are general safety rules for using plate joiners. Check the manufacturer's manual for any special safety instructions.

- A plate joiner ejects dust and chips at a high rate of speed. Keep your face away from the dust ejection chute. Wear safety glasses at all times.
- Wear ear protection. Most plate joiners are noisy.
- Unplug the power cord when changing blades or performing routine maintenance.
- Any workpiece that is likely to move during the cut should be clamped.
- Be sure that the blades are sharp. Sharp blades improve the cutting action and minimize the possibilities for kickback.
- Check the operation of the guard before using the tool. It should close smoothly over the blade.
- Do not disable the anti-kickback points on the faceplate. Make sure the points engage the workpiece.
- Keep hands away from the blade area when making cuts.
- Never hold a workpiece in your hand while cutting.
- Retract the blade fully after a cut. Failure to retract the blade may allow it to contact the workpiece too soon during the next cut. This can cause kickback.

Go to **glencoe.com** for this book's OLC for more on job safety.

the next layout mark. Continue to make cuts in this manner.

9. After turning off the tool, clamp the second board in place and repeat Steps 6–8.

In order for the boards to register (line up on the surface) correctly, it is important that all biscuit joint cuts be made from the same surface on adjoining boards: Cuts must be made all from the top or all from the bottom surface, to allow for the fact that the cutter may not be perfectly centered in the thickness of the board.

To assemble the boards edge to edge, brush glue into the biscuit grooves of one board. Insert the biscuits. Then apply additional glue to the exposed portions of the biscuits and to the edges of both boards. Press the boards together, using the penciled layout lines to ensure precise alignment. Clamp the boards together until the glue dries. Then rip the stock to final width if necessary, using a table saw.

Section 6.4 Assessment

After You Read: Self-Check

1. Name two applications for plate joinery in residential construction.
2. What wood is used to make biscuits?
3. Why does the grain of a biscuit run diagonally?
4. What are the three standard sizes of biscuits?

Academic Integration: Mathematics

5. **Equidistant Points** Jao has marked 4 equidistant points along a 30" board to cut slots for biscuits. The first and last positions are 3" in from the ends of the board. How far apart are each of the biscuit slots? You can draw a picture to help you with this problem.

Math Concept The word *equidistant* means the same (equal) amount apart. For example, if three equidistant points are placed on a line, each of the line segments between the points is the same length.

Step 1: Add the inches at the end of the board together. (3" + 3" = 6")

Step 2: Subtract this sum from the length of the board to find the length of the board that includes the biscuit slots. (30" − 6" = 24")

Step 3: Divide the length of the board that includes the biscuit slots (24") by the number of equidistant points (4) to determine how far apart each biscuit slot should be.

Go to glencoe.com for this book's OLC to check your answers.

Section 6.5

Power Nailers & Staplers

Nailing & Stapling Systems

What does "pneumatic" mean?

Power nailers drive many types of fasteners, including framing nails, finish nails, roofing nails, drywall nails, brads, and corrugated fasteners. Power staplers are used primarily for installing sheathing, subflooring, and roofing. However, they can also be used to fasten framing, trim, and wood flooring. These tools allow carpenters to install fasteners more quickly and with less fatigue. In addition, they are useful in confined work spaces where it is difficult or impossible to use other tools.

Power nailers and staplers are either pneumatic or cordless. A **pneumatic tool**, such as the one shown in **Figure 6-27**, is a tool powered by compressed air. It must be connected to an air compressor with a flexible air hose. The cordless types are sometimes driven by a rechargeable battery, but more often by an internal combustion engine and compressed gas. In this book, the terms nailer and stapler refer to both pneumatic and cordless models.

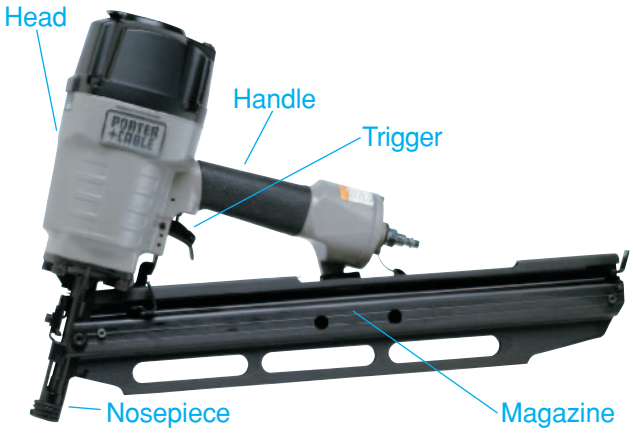

Figure 6-27 Pneumatic Nailer
Pneumatic Strip Nailer The main parts of a pneumatic strip nailer. This one has an angled magazine.

Pneumatic Tools

Compressed air is fed to a pneumatic tool through a high-pressure hose connected to an air compressor. The head of the tool or sometimes the handle holds the air. Most nailers and staplers operate on pressures of 60 to 120 psi (pounds per square inch). If the pressure is too low, the fastener may not be driven completely into the workpiece. If the pressure is too high, the fastener may be driven too deep. Excess pressure is also hard on the tool. The operating pressure appropriate for each tool can be found in the owner's manual.

Nailers and staplers are available in a variety of sizes that will drive a narrow range and type of fastener. For example, a nailer designed to drive 16d nails cannot be used to drive brads. When choosing a tool for a particular application, first determine the type and size of fastener needed. Then find a tool that will drive that fastener. If the tool is not cordless, you will need to then find an air compressor that will work with it.

How a Nailer Works Pulling the trigger on the tool releases the compressed air, which moves a piston in the head of the tool. This piston is attached to a driver blade. When the piston is forced downward, the driver blade strikes a fastener and pushes it into the workpiece at high speed. After the fastener has been driven, the piston retracts, pulling the driver blade with it. When this sequence is complete, another fastener is pushed into place, ready for the next pull of the trigger.

Newer nailers and staplers have a two-step firing sequence. This is an important safety feature. The trigger must be pulled *and* the

JOB SAFETY

NAILERS AND STAPLERS The following are general safety rules for using nailers and staplers. Check the manufacturer's manual for any special safety instructions.

- Keep bystanders away from the work area. Power-driven fasteners sometimes ricochet and can injure anyone nearby.
- Always wear proper eye and hearing protection when using a nailer or stapler.
- Never carry a nailer or stapler while keeping your finger on the trigger. If you were to bring the nosepiece of the tool into contact with a person or object, a fastener could be fired accidentally.
- Never attempt to override the safety mechanism.
- Never use bottled gases to power the tool. The driver blade of a nailer or stapler sometimes makes a spark when it hits the fastener. Thus, running the tool on oxygen, for example, could cause an explosion. In addition, carbon dioxide and other gases are bottled at pressures that are unsafe for use by nailers and staplers.
- Never operate a nailer or stapler at a pressure higher than it was designed to handle. Check the pressure gauge of the air compressor periodically.
- If you are using a belt-driven air compressor, make sure that the belts are protected by a cover.
- Before transporting an air compressor, release the pressure in the air-storage tank. Secure the air compressor so it does not roll around in the back of the vehicle.
- Make sure the tool is pointed at the ground when you connect a pressurized air hose to it. The sudden entrance of pressurized air into the tool can cause it to fire.
- Check the hoses connected to a tool to make sure they are in good condition. Never step on a hose. This causes it to wear prematurely.
- Pay particular attention to hoses while using pneumatic tools on a roof. Hoses are easy to trip over. They can also sweep tools off the roof. Secure the hose to a point near the place where you are working. Do not work while moving backwards.
- Never fire the tool until the nosepiece is in contact with the workpiece.
- Never try to clear a jammed tool while it is still connected to an air supply or power source. Disconnect the tool before performing any maintenance on it.
- Nails do not always go in straight and may fishhook out one side of the wood. Keep your hand at least 6" to one side of the impact point.

Go to **glencoe.com** for this book's OLC for more on job safety.

nosepiece of the tool must be pressed against the workpiece before the tool can be fired. This helps to prevent the tool from being fired accidentally. A *sequential trip* nail gun prevents the tool from firing unless the nose is pressed against the work piece *before* the trigger is pulled. *Contact trip* nail guns do not have this additional safety feature.

Maintaining Pneumatic Tools Pneumatic nailers and staplers are used for high-volume and high-speed installation of fasteners. They must be given regular care. Otherwise, fasteners will become jammed in the tool or be set improperly. Periodic maintenance also makes the tools safer to use.

- Store the tool at room temperature.
- Lubricate the gaskets on a regular basis in unusually cold weather. A gasket is a piece of flexible material that prevents air or liquid from moving between parts of a tool. The various gaskets on a pneumatic tool prevent air leaks. To lubricate the gaskets, place a few drops of tool oil into the air intake of the nailer just before

connecting the hose. Check the owner's manual for the recommended frequency for lubrication. Another method is to attach a line lubricator to the air compressor. A line lubricator automatically adds small amounts of lubricant to the air in the hose, which then conveys the lubricant to the tool. Be sure to check the owner's manual for lubrication requirements.

- Check the magazine, which holds the fasteners. It can become clogged by dirt and sawdust. Spray the magazine with a lightweight lubricant recommended by the manufacturer. Then wipe it clean.

Compressors and Hoses

An air compressor squeezes air into an air-storage tank. The air can then be released through a hose to power tools. The main parts of an air compressor are shown in **Figure 6-28**.

The **regulator** is a valve that controls the air pressure reaching a nailer or stapler. Inside the pump, one or more pistons compress the air into a small chamber. Most pumps on portable compressors are single-stage pumps. This means they pump the compressed air directly into the air-storage tank. Portable air compressors are often powered by electric motors. The motor usually drives the air pump by means of a belt connected to a flywheel. Large air compressors can be powered by gas engines.

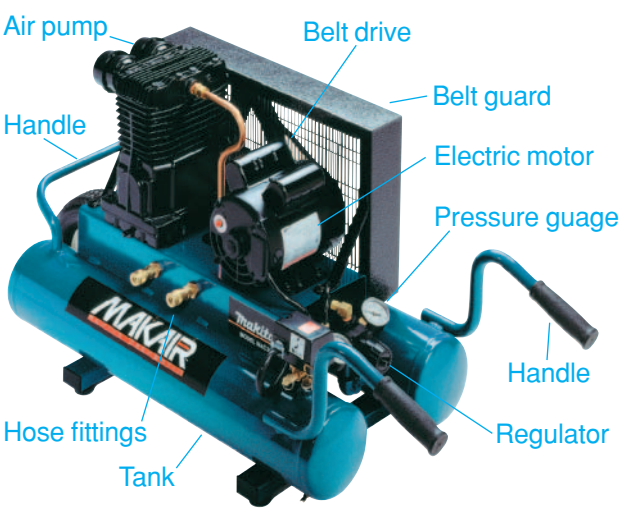

Figure 6-28 Air Compressor
A Portable Model The main parts of an air compressor. Handles allow two people to move the tool.

The air-storage tank is usually a cylinder holding 1 to 10 gallons of air. The advantage of a larger tank is that it makes more air available to the tool at any given moment. The disadvantage is that a larger tank makes the air compressor heavier, which makes it harder to move. A pressure gauge measures air pressure within the air-storage tank. A line-pressure gauge monitors the pressure in the hose leading to the tool. This is important because the pressure in the air-storage tank may be different from the pressure in the hose.

Air compressors used on job sites are portable. They can easily be moved around the site to be close to the work being done. The smaller, more portable air compressors are not intended for high-volume applications.

Air Compressor Maintenance The following are general guidelines for air compressor maintenance:

- Maintain the proper oil level in the pump.
- Release the air in the air-storage tank at the end of each workday. This helps to clear any moisture from the tank, which can rust. Removing moisture also keeps the airlines from freezing in cold temperatures and keeps them from blasting moist air into your power tools. The air should be released by opening the drain petcock(s) at the bottom of the tank(s), so as to allow water that has accumulated in the tank to escape.
- Clean the air intake filter on the pump regularly. This filter traps dirt, moisture, and other contaminants. If these contaminants reach the tool, they can cause excessive wear.
- The vibration of an air compressor can loosen fittings over time. Check all the fittings periodically. Tighten them as needed.
- Check the drive belt. Replace the belt if it is worn or damaged.

- Check the pressure gauge on the regulator periodically. Improper pressure will prevent the tool from setting fasteners completely.

Air Compressor Capacity The amount of air needed by various types and sizes of pneumatic tools varies. The rate and frequency of tool use will determine air consumption. To drive a framing nail, for example, can require 15 times the amount of air needed to drive a finish nail. Fastening subflooring is repetitive work that calls for many fasteners to be driven quickly. A nailer used for this work would require more air than one used for framing.

An air compressor must provide a steady air supply. Signs of a low air supply include air leakage from the tool, fasteners that are not set at the proper depth, and skipped shots. The volume of air is measured in cubic feet per minute (cfm) as it is delivered to the tool at a particular pressure. Pressure is measured in pounds per square inch (psi). For example, a framing nailer might operate best at 3 cfm and 90 psi. A brad nailer might require 2 cfm and 70 psi. Some carpenters find that they can fire fasteners more rapidly than an air compressor can supply air. This usually means that the air compressor is undersized.

Air Hoses The hose that is supplying air to a tool should have a minimum working-pressure rating that is 50 percent higher than the maximum pressure delivered by the compressor. This allows a margin of safety in case of malfunctions. Do not use hoses longer than 100'. The movement of air through a hose is slowed by friction. The longer the hose, the harder the air compressor must work to overcome friction.

Keep the outside of hoses clean. This helps to avoid premature wear. Keep the snap-on fittings at each end of the hose out of the dirt. Dirt and sawdust can clog the fittings, making it difficult to attach them to a nailer or stapler. Dirt-caked fittings can allow dirt into the tool.

JOB SAFETY

COMPRESSOR NOISE Air compressors are often noisy, and should be operated at a distance. Otherwise, workers may not hear someone approaching and may be startled or may swing the nailer around unexpectedly, causing an accident.

Go to **glencoe.com** for this book's OLC for more on job safety.

Cordless Nailers

A cordless nailer or cordless stapler resembles a pneumatic model but operates differently. Fasteners are driven by a small internal combustion engine in the head of the tool. Fuel for the engine is liquefied gas compressed into disposable canisters. This gas is injected into a chamber above the piston. The gas is then ignited by a spark from a rechargeable battery in the tool's handle.

Cordless tools such as the one in **Figure 6-29** are self-contained and do not require a hose and air compressor. This makes them useful in remote locations or where air hoses and an air compressor would be awkward to use. Cordless models are sometimes referred to as gas, horseless, or portable nailers or staplers.

Figure 6-29 A Cordless Nailer
Portable Power This cordless nailer is sized to install framing nails.

John P. Muzzarelli

Maintaining Cordless Tools A cordless nailer requires different maintenance. Follow instructions in the owner's manual or have the tool serviced professionally.

General maintenance rules are as follows:

- Charge the battery and replace the fuel cylinders as needed. Be sure to use the correct fuel cylinder. They are sometimes color-coded.
- If a combustion chamber filter is present, clean it frequently. The filter prevents dust and debris from being drawn into the combustion chamber. Replace the filter if it cannot be cleaned.
- Periodically clean the combustion chamber with an aerosol degreaser.
- Periodically clean the nosepiece. This is important when the tool is used to install roofing, because the asphalt from shingles will foul it. Use a putty knife to remove the asphalt. Although solvents are sometimes used for cleaning, they can damage O-rings in some nailers. Check the owner's manual for instructions. If the nosepiece cannot be cleaned or if it is worn, replace it.

Nails and Staples

Fasteners used in pneumatic or cordless tools are often purchased from the manufacturer of the tools. This is because fasteners made by one manufacturer may not fit another manufacturer's tools. When purchasing a stapler or nailer, be sure that you have access to a steady supply of suitable fasteners. Use of a fastener not recommended by the manufacturer may void the tool's warranty.

Nails Nailers must be loaded with nails that are collated. **Collated fasteners** are arranged into strips or rolls, with each fastener connected to the fasteners on either side. The nails are joined by plastic or paper strips or by fine wire, as shown in **Figure 6-30**. This enables nails to be fed through the tool automatically. The plastic or wire falls away as the nails are driven.

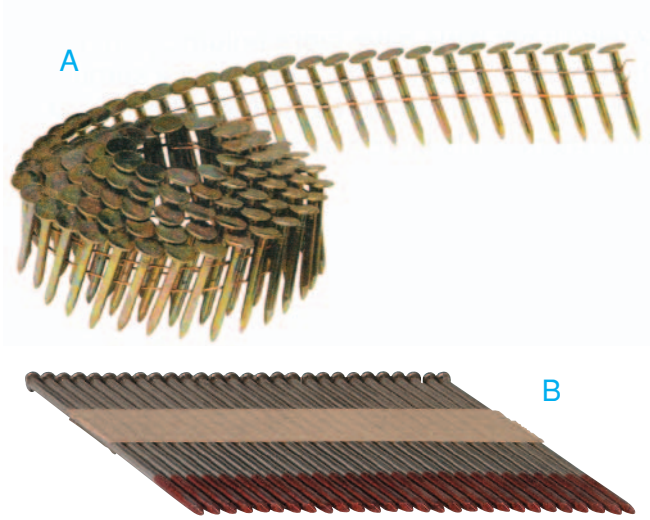

Figure 6-30 Collated Nails
Paper or Wire Nails in **A.** coil form and **B.** strip form The nails shown here have a D-head.

Collated nails are available in a variety of metals, including galvanized.

Nail Head Shapes Nails are classified by the shape of the nail head, the type of shank, and the length, as shown in **Figure 6-31** on page 192. The D-head, or clipped head, nail is used only with nailers. Part of the head has been removed, giving it a D shape. This allows the nails to be packed closely together. The disadvantage of a D-head nail is that it may not hold as well as a nail with a round head. Do not use D-head nails where building codes restrict their use. Such applications could include fastening shear walls and structures located where severe weather or earthquakes are common.

One option is to use *full round head* nails. The heads of these nails are not "clipped," but are instead the same size as a regular nail head. These nails are engineered to have the same holding power as a regular nail, and will meet codes in most areas. Always check with a local building official regarding the suitability of nail gun nail types. This is particularly important in regions that experience high winds.

Nail Shanks The shank of a nail is the portion below the head. The type of shank determines how well the nail will hold in various

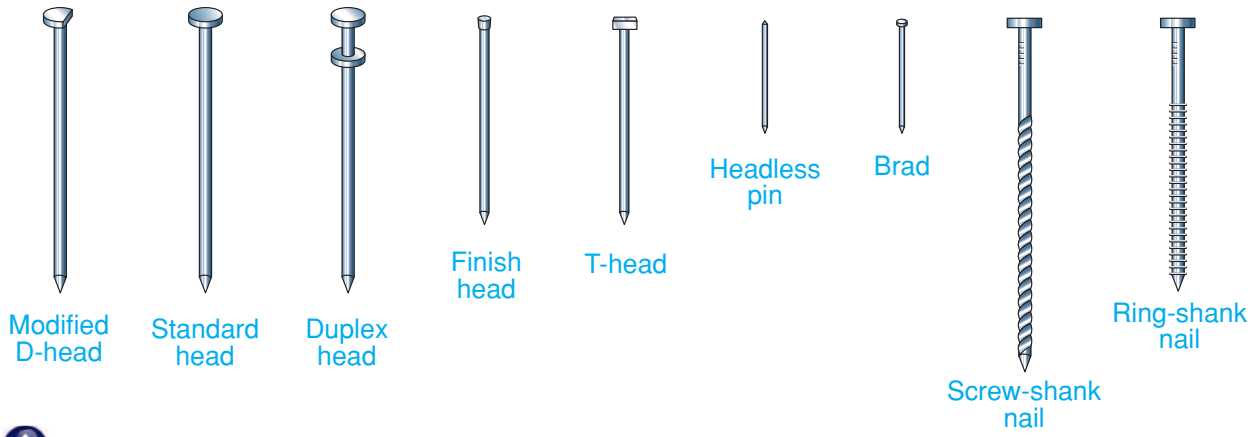

Figure 6-31 Types of Nails
Heads and Shanks Always choose a nail suitable for the type of work you are doing.

woods. Nails with several shank designs are available for pneumatic nailers. The following are among the more common types:

- Smooth-shank nails are used for general construction. The smooth shank provides good holding power in a variety of woods. Most framing and roofing nails are smooth-shank nails.
- Screw-shank nails have more holding power than smooth-shank nails. They have a spiral shape that is useful for nailing hardwoods.
- Ring-shank nails have a series of ridges or rings running from the point nearly to the head. They are best for applications that require extra holding power, such as for nailing wood that has a high moisture content. Ring-shank nails are sometimes used to nail subfloors because they can reduce the occurrence of squeaks.

Staples Staples are made of various metals, including steel, galvanized steel, stainless steel, aluminum, and bronze. They are classified by leg length, width of crown, wire size, and type of point. Basic staple anatomy is shown in **Figure 6-32**. Staples are generally available in lengths from ⅛" to 2½". The width of the crown is the overall width of the staple, including both legs. Crown width can be narrow, intermediate, or wide. Wire size is either heavy or fine.

Choosing the correct staple depends on the work to be done. For example, a fine-wire, narrow-crown staple is used where the staple must not show, as in fastening trim. Heavy-wire, wide-crown staples are used for attaching asphalt roofing and for other applications where extra holding power is needed. Common staple points are shown in **Figure 6-33**.

Fastener Magazines

The magazine is the container on a tool that holds a ready supply of fasteners. Fasteners are held in one of two types of magazine.

Strip-loaded tools, or strip tools, hold a straight row of nails or staples in a spring-loaded magazine. The magazine is sometimes angled toward the tool's handle. The angle helps the tool reach into confined areas.

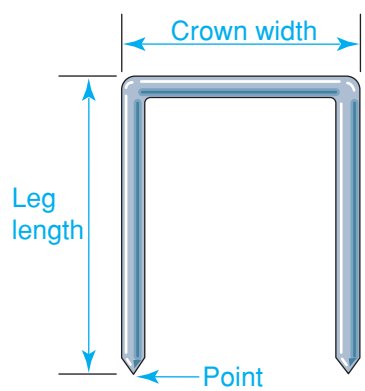

Figure 6-32 A Staple
Measuring The basic aspects of a staple.

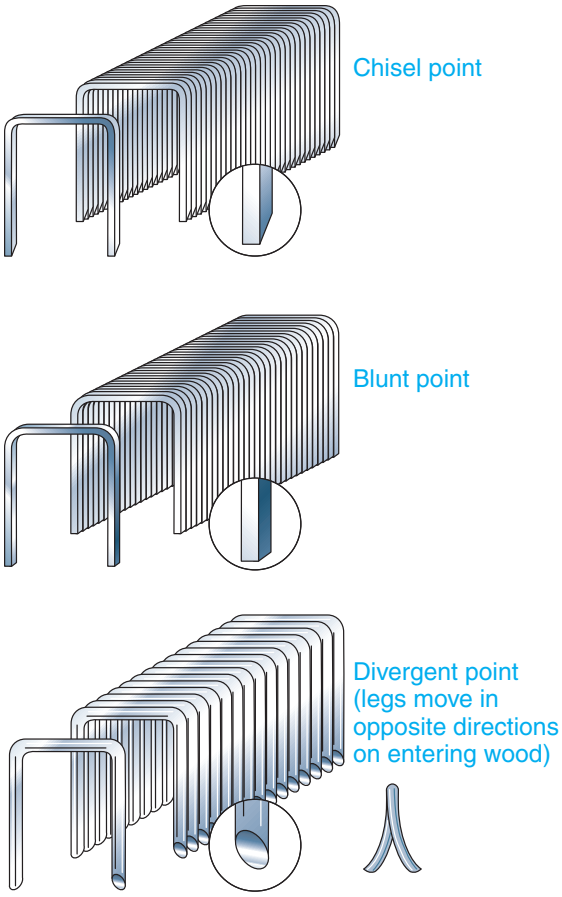

Figure 6-33 Common Staple Points
Details Matter The point of a staple is an important factor in how it performs.

Builder's Tip

DRIVING STAPLES The crown of the staple should be usually kept perpendicular to the grain of the wood. This "locks" it into the wood fibers. Inspect installed staples periodically to be sure that they are being driven properly. Staples driven into the wood at an angle do not hold as well. The exception is with staples used to fasten decorative trim.

Coil-loaded (or *coil*) tools are shorter and wider than strip-loaded models because they hold nails in a circular magazine (this magazine style is not available with staplers). Up to 300 nails can be loaded into a coil nailer at one time.

Strip-loaded tools are more common on job sites than coil-loaded tools. Some builders prefer strip tools because they are narrow and can be used in tight spaces. For example, toenailing studs is easier with a strip nailer. In addition, spare strips of nails are much easier to carry in a tool pouch than are nail coils.

Section 6.5 Assessment

After You Read: Self-Check

1. What is the firing sequence of a nailer or stapler?
2. What is the best way to choose a pneumatic nailer or stapler for a particular use?
3. What are collated fasteners?
4. What is a disadvantage of a D-head nail?

Academic Integration: Science

5. **Pressure** Pressure is the force per unit area applied on a surface in a direction perpendicular to that surface. What is the pressure of a nail gun that exerts 950 lbs of pressure over 10 in^2? Use the following formula to determine your answer:

$$\text{Pressure (psi)} = \frac{\text{Force (pounds)}}{\text{Area (square inches)}}$$

Go to **glencoe.com** for this book's OLC to check your answers.

CHAPTER 6

Review and Assessment

Chapter Summary

Section 6.1

A corded electric drill is best for drilling large holes. Cordless drills are useful where a long extension cord would be undesirable or where electrical power is not available. A pilot hole is required for starting screws, except when using self-drilling screws.

Section 6.2

A router is a portable tool that is used primarily for finishing work once a structure is enclosed. It is used for shaping the surfaces and edges of stock and for cutting joints.

Section 6.3

Portable electric sanders are used for tasks ranging from heavy stock removal to delicate finish sanding. The most common sanders are the belt sander and the finishing sander. Surfacing tools can be used to convert rough stock into finished stock on site.

Section 6.4

A plate joiner is used by finish carpenters to strengthen the joints in wood molding and for many other applications. The biscuits made for use with this tool are made of pressed wood.

Section 6.5

A pneumatic nailer or stapler uses compressed air to drive fasteners. A cordless nailer or stapler uses a small internal combustion engine and fuel to drive fasteners. An air compressor must be chosen to suit the type and size of nail being driven. Fasteners for nailers and staplers are collated to fit the tool.

Review Content Vocabulary and Academic Vocabulary

1. Use each of these content vocabulary and academic vocabulary words in a sentence or diagram.

Content Vocabulary

- amperage (p. 163)
- countersink (p. 166)
- pilot hole (p. 166)
- collet (p. 171)
- chamfer (p. 171)
- template (p. 172)
- cutterhead (p. 180)
- biscuit (p. 184)
- pneumatic tool (p. 187)
- regulator (p. 189)
- collated fasteners (p. 191)

Academic Vocabulary

- ranges (p. 162)
- approximate (p. 163)
- versatile (p. 165)

Speak Like a Pro

Technical Terms

2. Work with a classmate to define the following terms used in the chapter: *shank* (p. 162), *chuck* (p. 162), *twist bit* (p. 165), *combination bit* (p. 166), *fixed-base router* (p. 170), *bearing-over bit* (p. 172), *bearing-under bit* (p. 172), *mortises* (p. 172) *infeed* (p. 182), *outfeed* (p. 182).

Review Key Concepts

3. Organize the different types of drill bits and their uses in a list or grid.

4. Explain how to drill holes in wood and in metal.

5. List one use each for the following types of tools: routers, sanders, planers, and jointers.

6. Explain how a biscuit is used with a plate joiner.

7. Describe the different types of fasteners used with pneumatic tools.

Critical Thinking

8. Infer Why might areas that experience high winds require nails with stronger holding power?

9. Analyze Why is a jointer often used at the late stages of house construction?

Academic and Workplace Applications

STEM Mathematics

10. Like Fractions Drill bit sizes are given in fractions. These fractions signify (refer to) the diameter of the bit. Place the following drill bit sizes in order from smallest to largest: ¼", ⅜", 3⁄16", 13⁄32", ½", 15⁄64".

Math Concept You can compare fractions by converting them to like fractions. Like fractions have the same denominator. In fractions, the denominator refers to all possible parts of a whole. It is the number on the bottom of a fraction.

Step 1: Look at the denominators and find the least common multiple (LCM) of the denominators. The least common multiple of two numbers is the smallest number that is a multiple of both numbers.

Step 2: Convert each fraction to a like fraction with the LCM as the denominator by multiplying both the numerator and the denominator by the fraction form of 1 that will result in the LCM.

For example, take ⅜" bit: $\frac{3}{8} \times \frac{8}{8} = \frac{?}{64}$

$8 \times 8 = 64$, so use $\frac{8}{8}$ as the fraction form of 1 for conversion.

Step 3: Compare and order the fractions.

STEM Science

11. RPM *RPM* (revolutions per minute) is a measure of the rotational speed of the router bit, while the cutting speed measures the speed at which the router cuts through a material. The formula to determine RPM is:

$$\text{RPM} = \frac{\text{Cutting Speed}}{\text{Circumference}}$$

The cutting speed of a router bit increases as the diameter of the bit increases. What is the cutting speed of a ½" diameter router that turns at 25,000 rpm?

Starting Hint Calculate the circumference of the bit using the formula π times the diameter. Then multiply the circumference by the revolutions per minute.

21st Century Skills

12. Career Skills: Initiative and Self-Direction Research the job of *trim carpenter.* Write a one-paragraph job description. Include tools and equipment you would need to start a trim carpentry business.

Standardized TEST Practice

CERTIFICATION PREP

Short Response

Directions Write a phrase or sentence to answer each question. Use a separate piece of paper.

13. List at least two general safety rules for electric drills.

14. What is the best type of drill for driving screws and why?

15. In terms of sanding technique for wood, what is the difference between using an orbital sander and a random-orbit sander?

TEST-TAKING TIP

If a short response question is asking for facts, do not give your personal opinion on the topic.

*These questions will help you practice for national certification assessment.