CHAPTER 13

Engineered Wood

Chapter Objectives

After completing this chapter, you will be able to:

- **Explain** how the use of engineered lumber helps conserve wood resources.
- **Explain** the grading system for plywood.
- **Discuss** how to store, handle, and install LVL I-joists.
- **Describe** the differences among various types of engineered lumber.
- **Employ** safety rules when handling or machining engineered panels.

Discuss the Photo

Engineered Wood Engineered, or manufactured, wood products are often used in place of solid lumber. *How might engineered wood products conserve resources?*

Writing Activity: Persuasive Paragraph

After you have read the chapter, write a persuasive paragraph to support the use of engineered wood for a specific purpose, such as for subfloor. Be sure to state your position clearly, and use facts to support your position.

Corbis

Chapter 13 Reading Guide

Before You Read Preview

Solid wood was once the only wood product used in residential construction. The introduction of engineered wood products has dramatically changed residential construction techniques. Choose a content vocabulary or academic vocabulary word that is new to you. When you find it in the text, write down the definition.

Content Vocabulary

- engineered panel
- plywood
- plies
- veneer match
- composite panel product
- oriented-strand board (OSB)
- medium-density fiberboard (MDF)
- engineered lumber
- laminated-veneer lumber (LVL)
- glulam
- camber
- finger joint

Academic Vocabulary

You will find these words in your reading and on your tests. Use the academic vocabulary glossary to look up their definitions if necessary.

- assemble
- components
- temporary
- retain

Graphic Organizer

As you read, use a chart like the one shown to organize content vocabulary words and their definitions, adding rows as needed.

Content Vocabulary	Definition
engineered panel	any manufactured sheet product, including plywood that is made of wood or wood pieces bonded with a natural or synthetic adhesive

Go to glencoe.com for this book's OLC for a downloadable version of this graphic organizer.

Academic Standards

Mathematics

Measurement: Apply appropriate techniques, tools, and formulas to determine measurements (NCTM)

Geometry: Analyze characteristics of two- and three-dimensional geometric shapes and develop mathematical arguments about geometric relationships (NCTM)

English Language Arts

Use different writing process elements to communicate effectively (NCTE 5)

Science

Science and Technology: Abilities of technological design (NSES)

Science in Personal and Social Perspectives: Environmental quality (NSES)

Industry Standards

Engineered Wood Products and Panels

NCTE National Council of Teachers of English
NCTM National Council of Teachers of Mathematics
NSES National Science Education Standards

Section 13.1

Plywood

Plywood Basics

What are panels?

For many years, solid wood was the only wood product used in residential construction. Today, both solid wood and engineered wood are used in residential and commercial construction. The increasing use of engineered wood changed many residential construction techniques.

In this book, the term **engineered panel** refers to any manufactured sheet product, including plywood, which is made of wood or wood pieces bonded with a natural or synthetic adhesive. **Plywood** is a building material that consists of layers of wood veneer and sometimes other materials that have been glued together.

Unlike solid lumber, plywood comes in large sheets, called *panels*, that can be installed quickly. Several other panel products are now common on residential, as well as commercial, job sites. Some are made of wood flakes, wood dust, or wood fibers mixed with *adhesives*. Others are made of wood fiber mixed with Portland cement. All of these manufactured panels, including plywood, share the following characteristics:

- They are engineered for the efficient use of wood resources. They are often made of wood that would otherwise be unused or wasted.
- They are manufactured using various natural or synthetic adhesives.
- Their performance is highly predictable.

Plywood is a versatile building material. It is relatively light but very strong, and comes in a variety of thicknesses. It is important at almost every stage of home building. For example:

- Plywood made into foundation forms provides a stiff, uniform surface for forming concrete.
- Plywood floor, wall, and roof sheathing stiffens and strengthens the structure of the house, as shown in **Figure 13-1**.
- Plywood soffits provide a smooth, easy-to-paint surface.
- As underlayment, plywood makes a smooth substrate for finish flooring.
- Cabinets and built-ins are often made of plywood because it holds fasteners well and accommodates various types of joinery.

Types of Plywood

Plywood panels can be divided into two basic categories: structural plywood (once called softwood plywood or construction plywood) and hardwood plywood. Hardwood plywood is used for paneling, cabinets, built-ins, and other interior features. This chapter deals primarily with structural plywood because that is the type most widely used in building construction. Structural plywood is used for sheathing, subflooring, concrete forms, and other uses where strength is more important than looks.

The Composition of Plywood As mentioned previously, plywood consists of layers of wood veneer and sometimes other materials that have been glued together. Wood veneer is a very thin, pliable sheet of wood that has been sawed, peeled, or sliced from a log. When used in plywood, these thin sheets are called **plies**. Plywood is manufactured with an odd number of layers of these veneers. The grain of each layer runs at a right angle to that of the neighboring layers. Construction and industrial plywoods may have three, five, or seven layers.

The grain of the outermost plies always runs in the same direction relative to each other. This is usually along the length of

Figure 13-1 Plywood
Structural Sheathing Plywood sheathing stiffens the house structure and provides a solid base for siding, roofing, and other materials.

the panel, as shown in **Figure 13-2**. The outermost plies are called *face plies* (A). The face ply of best quality is called the *front face*, or *face*. The other is called the *back face*, or *back*. The plies between the two face plies make up what is called the core (B). Plies that are arranged at a 90° angle to the face plies are called *crossbands*.

Hardwood plywoods may be made entirely of veneers or of veneers bonded to a core of glued-up lumber, as shown in **Figure 13-3** on page 340. The latter is called *lumber-core plywood.* Some types of hardwood plywood have a particleboard core. Particleboard is made of very small particles of wood bonded together by adhesives.

How Plywood Is Manufactured

After a tree is cut and the log is trucked to a plywood mill, it goes into a pond for storage. Only select logs qualify as plywood *peeler* logs, from which veneers will be cut. A chosen log is lifted from the pond and cut to length. As it moves into the mill, it passes through a debarker that uses high-pressure jets of water to blast off the bark. An overhead crane lifts the stripped log into a lathe. The log is then spun against a long, razor-sharp steel blade that slices a continuous strip of thin wood veneer from the log. As the veneer is sliced from the log, it moves over conveyors to the clipping machine, where giant knives cut it to a specific width. Then the veneer sheets pass into the dryers to reduce the moisture content of the wood.

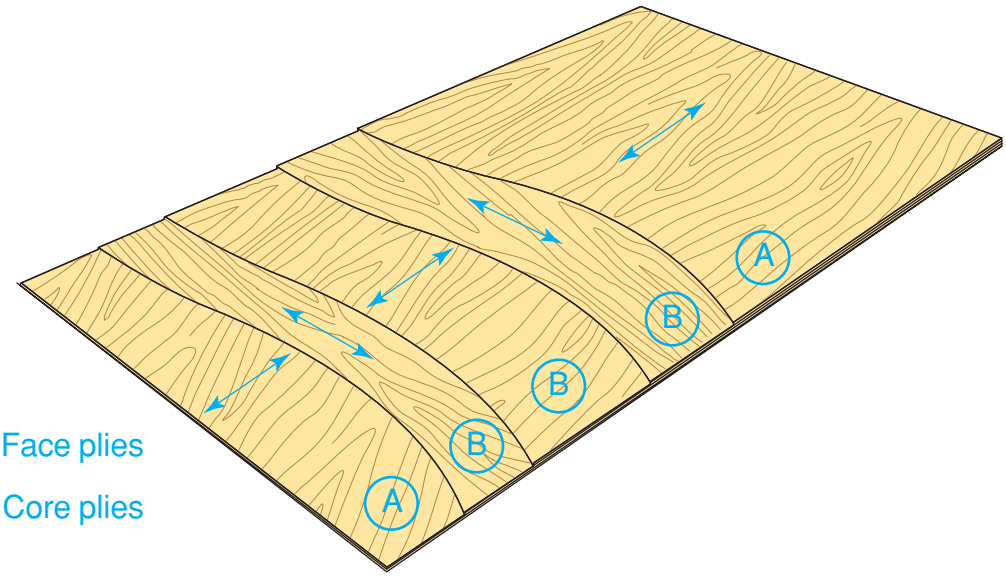

Figure 13-2 Structural Plywood
Veneer Layers This is an example of a plywood panel with five layers, or *plies.* The arrows indicate grain direction.

Courtesy of the American Engineered Lumber Assoc.

Next, natural defects in the veneer sheets are cut out and the holes are patched with solid wood or synthetic patching material. Some sheets then go through the glue spreader, where large rollers cover both sides with adhesive. Glue-covered sheets are stacked alternately with unglued sheets to make up panels of the desired thickness. This is called the *lay-up process*. After lay-up, panels go into presses where the wood and glue are bonded together using pressure and, in some cases, heat. This creates a product that is strong, rigid, stable, and able to resist great impact. The panels are trimmed to exact length and width, sanded to final thickness, and inspected. Blemishes (imperfections) in the face plies are repaired. The panels are then graded and bundled.

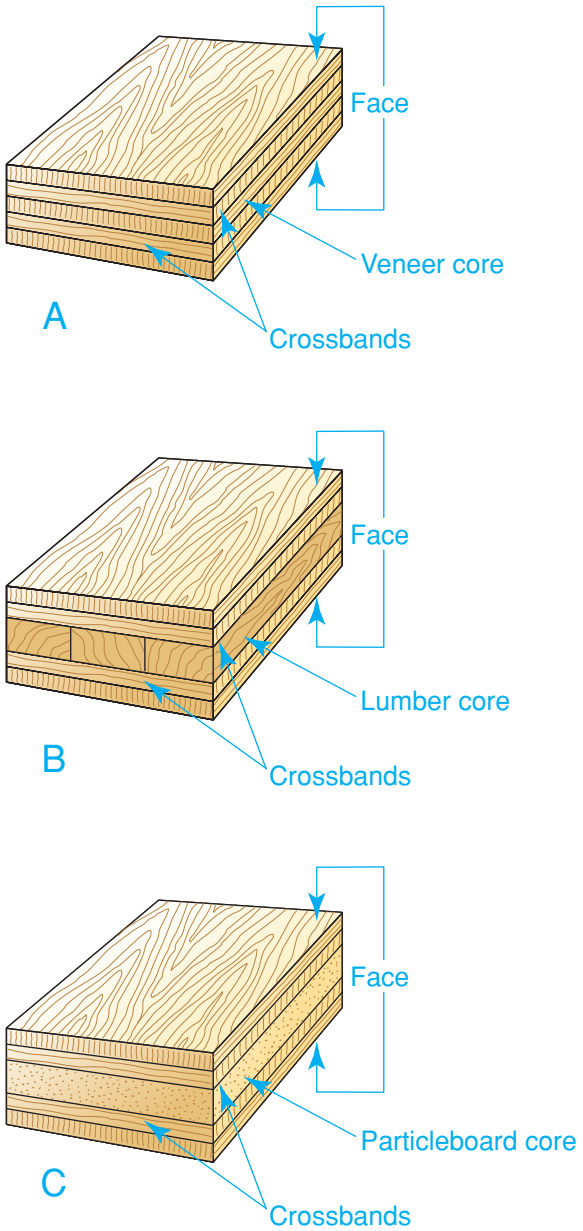

Figure 13-3 Hardwood Plywood
Mixed Layers Three types of cores found in hardwood plywood. **A.** A veneer core is made of thick wood veneer. **B.** A lumber core consists of strips of lumber bonded together. **C.** A particleboard core is commonly used for cabinet doors because it is very stable.

How Plywood Is Graded

Grade marks are stamped on the back face of structural plywood. Typical grade marks are shown in **Figure 13-4**. The purpose of a grade mark is to identify all the features of a panel. This enables builders to select the right panel for the job. The grade mark also enables building inspectors to verify that the correct materials have been used.

Structural plywood is graded by one of two methods. In the *prescriptive* method, a panel is graded by the quality of its veneer, the adhesives used to **assemble** it, the number of its layers, and its dimensions. In the *performance* method, the panel is rated according to its suitability for a particular use. Hardwood plywoods are graded primarily by veneer quality, species, and the arrangement of the face plies.

Prescriptive Grading Under this system, plywood is graded according to a variety of factors. These factors relate to the type and quality of wood it is made from, its construction, and other characteristics. These factors are identified on the grade stamp.

Wood Species Most structural plywood is made of softwoods such as Douglas fir. On the basis of stiffness and other factors, these species are divided into five groups. The strongest woods are found in Group 1, listed in **Table 13-1** on page 342.

Veneer Quality The quality of the veneer is specified by a letter, ranging from A (highest) to D (lowest). Plywood often has faces of

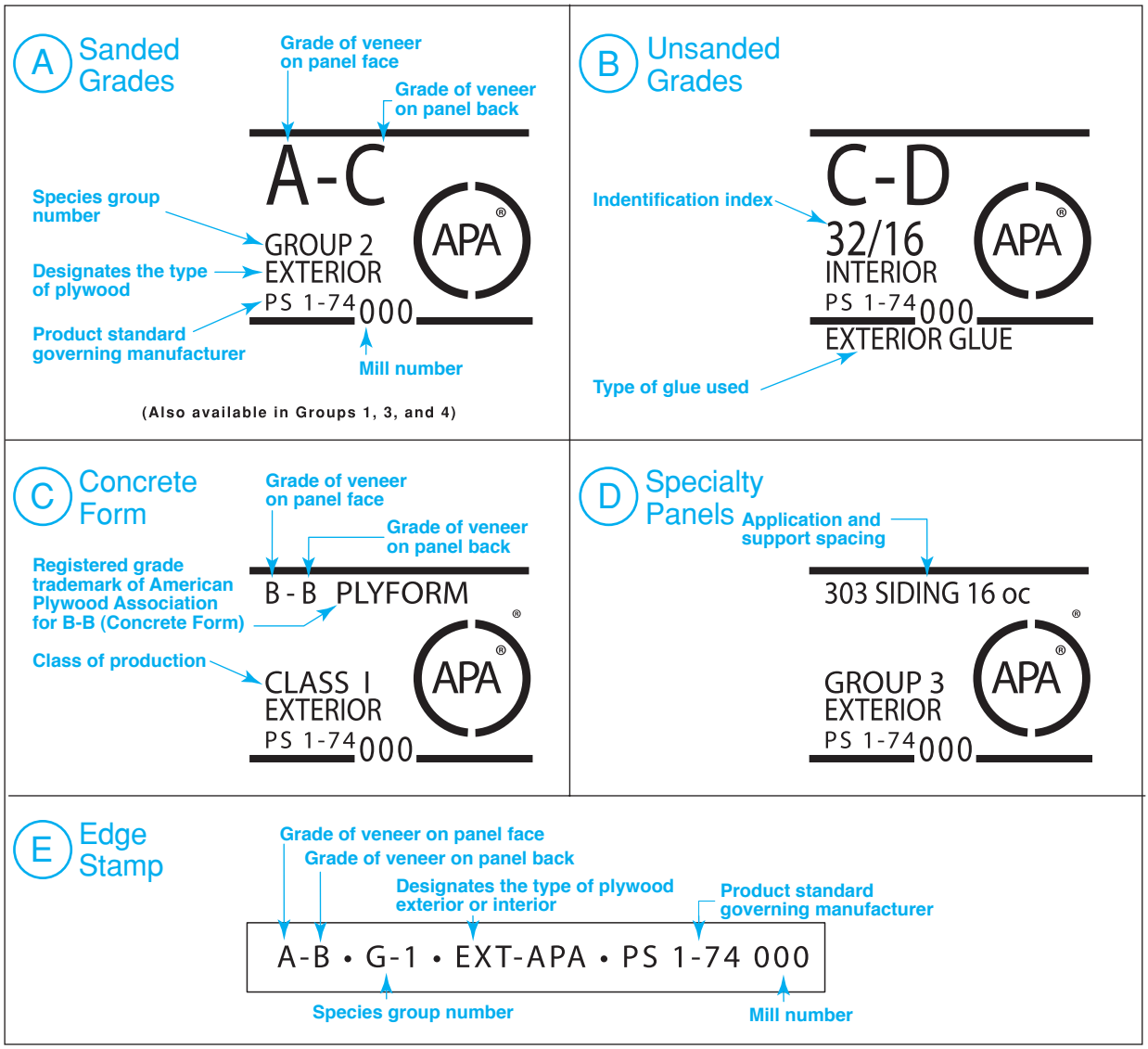

Figure 13-4 Plywood Grade Stamps
Panel Identification A grade stamp may be located on the back face of a panel or on one edge.

differing quality. Because smoothness is not as important on the side installed against the framing, it is typically a lesser grade. Veneer quality grades are listed in **Table 13-2** on page 343. By mixing veneers, mills can conserve quality woods and produce panels more cost effectively.

Adhesives The type and durability of adhesive used to assemble the panel affects its resistance to weathering and moisture. Exterior-grade plywood is designed for long-term exposure to the weather. It is made with water-resistant glue. The veneer-quality marking for a panel made with water-resistant adhesive is followed by an *X* (for example, CDX). Panels made with adhesives that are not water resistant should be used indoors only.

Construction The number of layers in a plywood panel usually corresponds to the number of plies. In some cases, two of the inner plies may be glued together with their grain running parallel, forming a single inner layer. The two plies count as one layer. Most structural plywood has 3, 5, or 7 plies.

Table 13-1: Classification of Wood Species Used in Plywood[a]					
Group 1	**Group 2**		**Group 3**	**Group 4**	**Group 5**
North American Species—Applicable to trees grown in North America					
Beech, American	Cedar, Port Orford	Pine	Adler, Red	Aspen	Basswood
Birch	Cypress	Pond	Birch, Paper	Bigtooth	Poplar, Balsam
Sweet	Douglas fir[b]	Red	Cedar, Alaska	Quaking	
Yellow	Fir	Virginia	Fir, Subalpine	Cedar	
Douglas fir[b]	Balsam	Western White	Hemlock, Eastern	Incense	
Larch, Western	California	Spruce	Maple, Bigleaf	Western Red	
Maple, Sugar Pine,	Red	Black	Pine Jack	Cottonwood	
Southern	Grand	Red	Lodgepole	Eastern	
Loblolly	Noble	Sitka	Ponderosa	Black (W. Poplar)	
Longleaf	Pacific Silver	Sweetgum	Spruce	Pine	
Shortleaf	White	Tamarack	Redwood	Eastern White	
Slash	Hemlock, Western	Yellow Poplar	Spruce	Sugar	
Tanoak	Maple, Black		Engelmann		
			White		
Non-North American Species					
Apitong[c][d]	Lauan	Mengkulang[c]		Cativo	
Kapur[c]	Almon	Meranti, Red[c][e]			
Keruing[c][d]	Baglikan	Mersawa[c]			
Pine	Mayapis				
Caribbean	Red Lauan				
Ocote	Tangile				
	White Lauan				

[a]Table 1 species classified in accordance with ASTM D 2555.
[b]Douglas fir from trees grown in the states of Washington, Oregon, California, Idaho, Montana, Wyoming, and the Canadian Provinces of Alberta and British Columbia shall be classified as Group 1 Douglas fir. Douglas fir trees grown in the states of Nevada, Utah, Colorado, Arizona, and New Mexico shall be classified as Group 2 Douglas fir.
[c]Each of these names represents a trade group of woods consisting of a number of closely related species.
[d]Species from the genus Dipterocarpus marketed collectively: Apitong if originating in the Philippines, Keruing if originating in Malaysia or Indonesia.
[e]Red Meranti shall be limited to species having a specific gravity of 0.41 or more based on green volume and oven dry weight.

Dimension The thickness of structural plywood ranges from ¼" to 1¼" or more. Plywood is most commonly available in panels that are 4' wide and from 8' to 12' long. The most common sheet size used in residential construction is 4' × 8'. When referring to the size of panel products, remember that the width is always given first. Thus, a 4' × 10' sheet is 4' wide and 10' long. The grain of the face plies runs along the length.

Performance Grading Some structural plywood panels, sometimes called *span-rated* panels or *performance-rated* panels, are graded using a performance-based standard. Instead of identifying how the panel is made, the standard identifies how it will perform. Performance-rated panels are typically used for single-layer subflooring, exterior siding, and sheathing. Each of these categories is subdivided into further categories based on how resistant it is to moisture. A grade stamp developed by APA—The Engineered Wood Association is shown in **Figure 13-5**.

Specialty Plywood

Plywoods are often adapted for special uses. For example, foundation-grade plywood includes panels that have been treated with

Table 13-2: Veneer Quality	
N	Intended for natural finish. Selected all heartwood or all sapwood. Free of open defects. Allows some repairs.
A	Smooth and paintable. Neatly made repairs permissible. Also used for natural finish in less demanding applications.
B	Solid surface veneer. Repair plugs and tight knots permitted.
C	Sanding defects permitted that will not impair the strength or serviceability of the panel. Knotholes to 1½" and splits to ½" permitted under certain conditions.
C plugged	Improved C veneer with closer limits on knotholes and splits. C-plugged veneers are fully sanded.
D	Used only for inner plies and backs. Permits knots and knotholes to 2½" maximum dimension and ½" larger under certain specified limits. Limited splits permitted.

preservative chemicals. These are used where the wood will be permanently installed in contact with the earth. Tongue-and-groove plywood is used in the construction of single-layer flooring systems. Concrete formwork plywood has a finish that resists damage caused by contact with cement, and the edges may be painted to increase the panel's durability.

Hardwood Plywood

Hardwood plywood is more expensive than structural plywood of a similar thickness and size. Hardwood plywoods are commonly found in 4' × 8' × ¾" sheets, but other sizes and thicknesses are available. Birch, maple, and oak are frequently used for the face plies. Panels made from other domestic and exotic woods can be obtained from specialty supply sources.

The appearance of a hardwood plywood panel depends upon the species of wood used and the way the face plies are milled and applied. Hardwood plywood is used for finish work in which appearance is very important.

Mills provide many options for the manufacture and arrangement of face plies. There are four basic milling methods, called

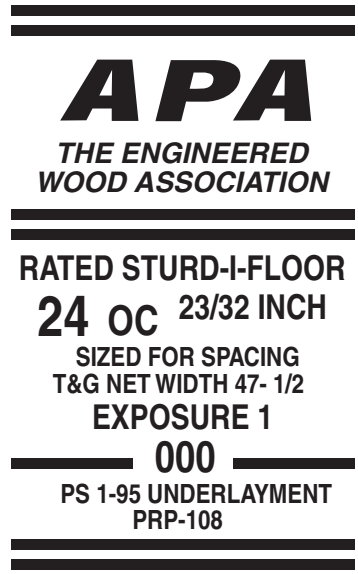

Figure 13-5 Performance Grade Stamp
Rated for Use This grade stamp is for a subflooring panel. *What is the maximum spacing of joists allowed?*

cuts. They are shown in **Figure 13-6** on page 344. Two logs of the same species, with their veneers cut differently, will have an entirely different appearance even though their colors are similar.

Face plies are applied to the panels using one of five basic arrangements. The arrangement of pieces of veneer is called a **veneer match**. This creates different patterns and effects, as shown in **Figure 13-7** on page 345 An unusual combination of cut and veneer match may have to be special ordered from the plywood supplier. Hardwood plywood veneers are precision matched and available in a variety of veneer types.

Reading Check

Recall *List two prescriptive grading factors.*

How Plywood Is Used

How should plywood be stored?

Working with plywood involves knowing how to store, cut, shape, and fasten it. All of these factors relate to each other. For example, if plywood is not stored properly, it will not perform as intended.

Figure 13-6 Cuts of Plywood

Different Slices The manner in which veneers are cut is an important factor in producing various effects.

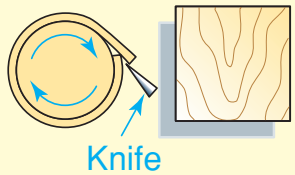

A **Rotary Cutting**
The log is mounted centrally in the lathe and turned against a razor-sharp blade. Since the cut follows the log's annual growth rings, a bold, irregular grain marking is produced. Eighty to 90 percent of all veneer is cut by the rotary lathe method.

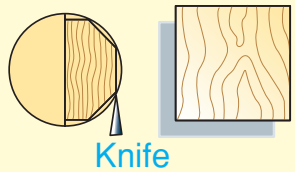

B **Plain or Flat Slicing**
The half log, or flitch, is mounted with the heart side flat against the guide plate of the slicer. The slicing is done parallel to a line through the center of the log. This produces an irregular figure that is similar to that of sawn lumber.

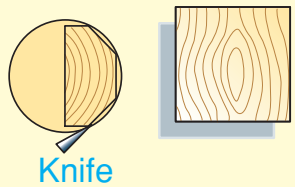

C **Half-Round Slicing**
With this method, log segments are mounted off-center in the lathe. This results in a cut slightly across the annual growth rings, and shows characteristics of both rotary and plain sliced veneers. This method is often used on red and white oak.

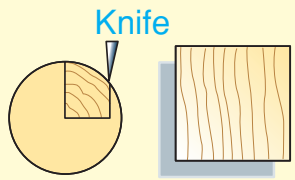

D **Rift Cutting**
Rift-cut veneer is produced from species of oak. Oak has medullary ray cells that radiate from the center of the log like the curved spokes of a wheel. The rift, or comb, grain effect is obtained by cutting perpendicularly to these medullary rays on either the lathe or the slicer.

Storage

Store plywood sheets flat whenever possible. This reduces the chance that sheets will warp or tip over. If flat storage is not possible, you can store sheets on edge for short periods. Take precautions to prevent them from tipping over.

Plywood should be stored indoors until it is ready for use and is delivered to the job site. It can be stored outdoors as long as it is protected from the weather by a waterproof tarp. The sheets should be stacked atop wood spacers that support the pile at least 1½" above the ground. Use enough spacers to prevent the sheets from bowing.

Cutting and Shaping

Like any panel product, plywood must always be supported firmly as it is cut, as shown in **Figure 13-8**. This prevents dangerous kickback when using power saws. It also prevents binding when using a handsaw. Sawhorses are often used to support plywood sheets. Some builders make a simple cutting table to improve safety and convenience.

Plywood should be supported on each side of the cut line, at each end of the piece to be kept, and at the offcut. However, when the offcut is less than 1' wide, it can be difficult to support. In that case, it is generally left unsupported and allowed to fall away.

When hand-sawing plywood, always place the best face up and use a saw that has at least 10 to 15 points to the inch. Hold the saw at a low angle. If you must cut cabinet-quality plywood with a circular saw, place

Figure 13-7 Veneer Matching

Different Arrangements Veneer matching refers to the alignment of veneer strips on a panel.

Book Match

Book Match

This is accomplished by turning over every other piece of veneer peeled in sequence from the same log. The finished face resembles the opened pages of a book, with opposite patterns identical.

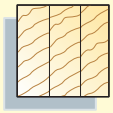

Slip Match

Slip Match

Pieces of veneer cut in sequence are joined side by side, same sides up. The result is a grain pattern more uniform than book match.

Whole-Piece

Whole-Piece

This method uses a single piece of veneer to expose a continuous grain characteristic across the entire panel.

Pleasing Match or Unmatched

Pleasing Match

The face veneer is matched for color at the veneer joint but not necessarily matched for grain characteristics.

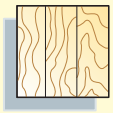

Mismatch or Random Match

Mismatch or Random Match

Veneers are joined with the intention of creating a casual, unmatched effect, such as for prefinished wall panels. Veneers from several logs may be used in the manufacture of these panels.

Unmatched

The veneer is assembled with no regard for color, pattern, or grain uniformity. This method is usually used for panel backs.

Figure 13-8 Safe Support for Plywood

Preventing Kickback When cutting plywood or any other sheet product, always support it on each side of the cut line. This will prevent it from binding on the saw blade.

Roger B. Bean

the best face down to minimize splintering. When cutting plywood on a table saw, always place the best face up. With either saw, adjust the blade so that its teeth just clear the top of the plywood. This reduces blade exposure and increases safety. Scoring the veneer before cutting helps reduce splintering.

Plywood can be shaped with various tools. A belt sander can be used to round off corners or shape edges to fit an irregular surface. Large holes can be made in plywood using a jigsaw or a large-diameter, toothed drill bit called a *hole saw*. Routers can be very useful for cutting large holes in a panel once it is in place.

Fastening

Plywood can be fastened to other materials using wood adhesives, nails, and screws. However, no fastener works as well on the edges of plywood as it does on the face plies. It is important to remember this, especially when attaching hinges.

When driving screws into plywood by hand, a hole should be pre-drilled. Holes should also be pre-drilled when inserting screws close to the edge of a sheet to prevent the edge from splitting. Screws with sharp points, such as drywall and decking screws, can be driven directly into plywood with a screw gun, impact driver, or an electric drill fitted with a screwdriving tip.

When nails or screws are not enough to hold plywood in place, adhesives should also be used. The combination, called glue-nailing, produces a particularly strong bond. Many builders glue and nail sheathing plywood to the floor framing to produce an extra stiff floor.

Where finish nails are used, conceal the nail holes with wood putty. Press the putty into the hole, level it off with a putty knife, and then sand the putty after it is dry. When using screws to fasten plywood, set the heads flush with the plywood.

Builder's Tip

PREVENTING SPLINTERING When you are drilling through plywood, the panel may splinter on the back where the bit emerges. To prevent this, clamp a scrap piece of plywood beneath the area to be drilled. Then drill through the top piece and into the scrap. The scrap minimizes splintering by supporting the edges of the hole.

Section 13.1 Assessment

After You Read: Self-Check

1. Name at least three general uses for plywood in residential building construction.
2. Describe the three types of cores found in hardwood plywood.
3. What is the purpose of veneer matching of hardwood plywood?
4. What is the technique used to minimize splintering when drilling through plywood?

Academic Integration: English Language Arts

5. **Specialty Plywood** Plywood is often adapted for special uses. Research one type of specialty plywood. Write three to five sentences about your findings. State the name of the specialty plywood and explain what it is used for.

Go to glencoe.com for this book's OLC to check your answers.

Section 13.2

Composite Panels, Laminated Veneer, & I-Joists

Composite Panel Basics

What is a composite?

Unlike plywood, which is made entirely from layers of wood veneer, a **composite panel product** is made from pieces of wood in a variety of forms, including veneer, chips, and fibers. The wood is mixed with adhesive and formed into panels. These panel products often share many of the same characteristics as plywood. Many can be used for sheathing, subflooring, cabinetry, and paneling. The most common types of composite panels are oriented-strand board (OSB), hardboard, medium-density fiberboard (MDF), and particleboard, as shown in **Figure 13-9**. Various other names are often used to describe certain engineered panels. For example, *chipboard*, *waferboard*, and *flakeboard* are all names for panels that are essentially the same or similar to oriented-strand board. *Com-ply* is a panel developed by APA—The Engineered Wood Association. It consists of a core made of compressed wood strands and has faces made of wood veneer.

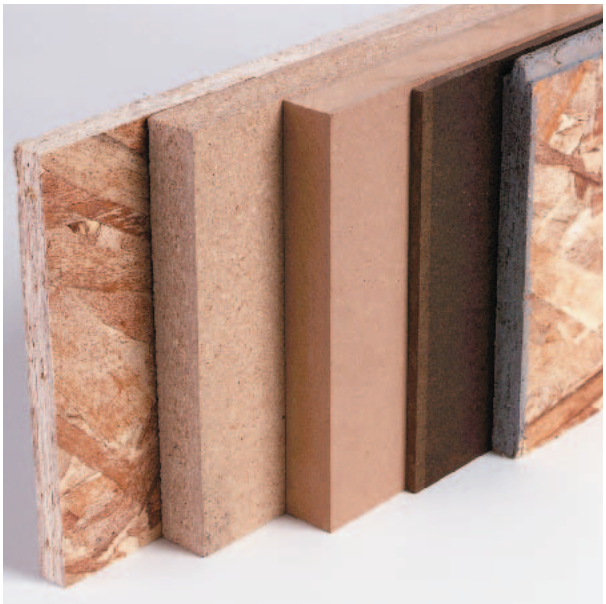

Figure 13-9 Composite Panels
Wood Bits and Glue From left to right: oriented-strand board (OSB), particleboard, medium-density fiberboard, hardboard, and tongue-and-groove oriented-strand board.

Build It Green Composite panels are often made from wood that would otherwise be unused or wasted. This includes trees that are unsuitable for veneers, trees that are too small for lumber production, and trees that grow too quickly to produce sound lumber. Portions of trees that would otherwise go unused, such as stumps and limbs, can also be used.

The Structure of Composites

The wood pieces used in composite panels range in size from small fibers, as shown in **Figure 13-10**, to large flakes. Two strong influences on the properties of composite panels are:

- The size and shape of individual flakes and particles.
- The ratio of adhesive to particles.

Particle shape and adhesive content can be controlled to create a given set of physical properties. The size, type, and position of the particles also will affect a panel's surface smoothness.

Adhesives A critical ingredient of a composite panel is the adhesive used to bond the wood pieces or particles. Adhesives may be water-resistant or waterproof. They are generally synthetic resins such as urea formaldehyde. Urea-formaldehyde adhesives are highly water resistant and have excellent bond strength. There is a trend toward developing other types of adhesives because of health concerns about off-gassing

Figure 13-10 Composite Panel Fibers
Interlocking Fibers These fibers are typical of those used in manufacturing fiberboard.

in formaldehyde-based products. Off-gassing is the gradual release of gaseous materials from a solid product. Some people are very sensitive to formaldehyde vapors. The chemical can cause eyes to water or lead to breathing problems. When products containing formaldehyde are used in tightly sealed structures, vapors can accumulate to unhealthy levels. Urea-formaldehyde resins are a particular problem in this regard. Urea resins release formaldehyde vapors. Because of health concerns, the amount of formaldehyde has been greatly reduced in various panel products. The composite panel industry is also developing new adhesive products that will reduce or eliminate off-gassing.

Additives Other ingredients may be added to the mix of adhesives and wood to change panel characteristics. Small amounts of wax (0.5 percent to 1 percent) reduce a panel's tendency to absorb moisture and make it more suitable for such uses as sheathing. Fire-retardant chemicals can be added to make the panel more suited to areas where wildfires occur. Preservatives can be added to make the panel last longer.

Making a Composite Panel

The difference in manufacturing between plywood panels and composite panels rests in the way the wood is processed. In composite products, logs or wood scraps are processed mechanically to create fairly small, uniform pieces. In some cases, the pieces are chemically treated to make them even smaller. The pieces are mixed with adhesives and other additives. The mixture is then formed into a thick layer called a *mat*, as shown in **Figure 13-11**. The mat is squeezed under heat and pressure into sheets of a specified thickness.

Composite panels can be given special finishes or treatments at the mill. Surfaces may be filled or primed for easy painting, embossed or textured for a decorative surface, or covered with a vinyl overlay. The edges of panels may be banded with lumber, machined for tongue-and-groove joints, or given special sanding or overlays. Panels can be laminated together to make unusually thick panels. They also can be glued edge to edge to create large panels. The most common panel size is 4' × 8', but panels up to 8' × 16' are available.

The Future of Composites

As our forests are managed with ever more care, scientists and wood technologists continue to develop new composite products. The goal is to make the most efficient use of our forest resources. Various materials are being studied in addition to those noted in this chapter. They include recycled wood products, compressed natural grasses, and wood fiber mixed with thermoplastics.

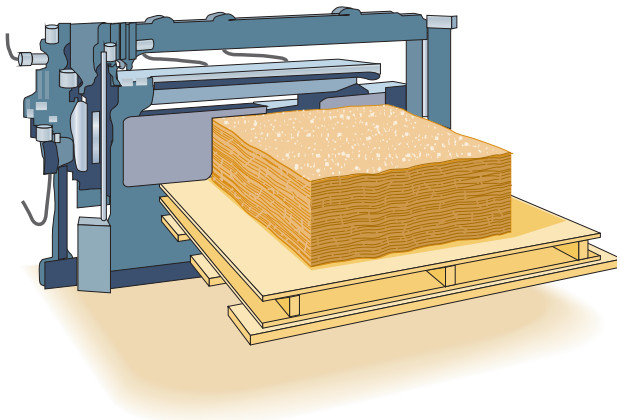

Figure 13-11 A Composite Panel Mat
Big Squeeze When this composite panel mat leaves the press, it will be only about 0.12" thick.

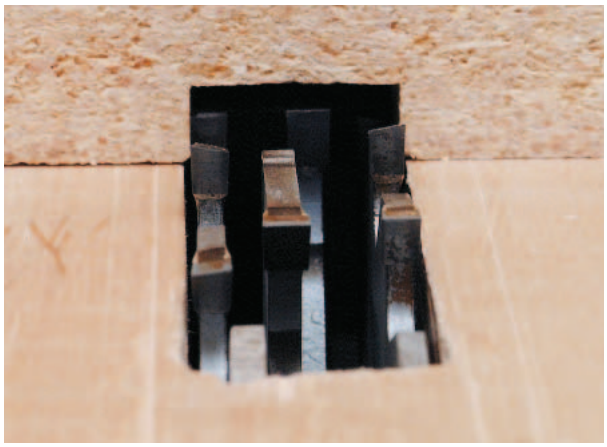

Figure 13-12 Cutting Composites
Good Edges Use blades with carbide teeth when cutting composite panels.

Figure 13-13 Oriented-Strand Board
Interlocking Strands In OSB, the strands are directionally oriented.

Each new product must be thoroughly tested before it is approved for construction use. Many composite products incorporate chemicals and other additives that are not in solid wood. Therefore it is always important to learn as much as you can about a new product before using it. This would include gathering information about its long-term structural performance as well as its impact on the environment and human health.

Always review the material safety data sheet (MSDS) for any composite product you are not familiar with. It will suggest suitable precautions.

Working with Composites

Composite panels are free from cracks and other imperfections commonly found in solid and veneered wood. They present none of the problems related to grain in wood. Generally, they can be worked with standard woodworking tools. Because composite panels are made to exact thicknesses at the mill, there is little need for further surface preparation, such as sanding. They can be sawed, routed, shaped, and drilled cleanly, with crisp edges and corners. Carbide teeth are generally recommended for circular saw blades, as shown in **Figure 13-12**.

All types of joints for casework or architectural assemblies are readily made with composites. Architectural panels may be butted or splined. In cabinetry, miter, lock-miter, doweled, mortise-and-tenon, and tongue-and-groove joints are common. The absence of voids gives these products a full, uniform contact surface for gluing. This means strong butt joints. Short lengths can be glued into longer sections for a minimum of waste. Check the manufacturer's literature for advice on the best adhesives to use.

Oriented-Strand Board **Oriented-strand board (OSB)** is made from wood strands bonded with adhesive under heat and pressure. It has been available since the early 1980s. It is now considered similar to plywood in strength and usefulness, especially for sheathing and subflooring. In many parts of the country it has replaced plywood as the most common sheathing product.

Though a variety of wood species can be used, most OSB is made from aspen, southern pine, and various medium-density hardwoods. The strands in each layer of an OSB panel are oriented (positioned) so they run more or less in one direction, as shown in **Figure 13-13**. Then layers are placed perpendicular to each other. Panels usually have three or five layers.

OSB is available with square or tongue-and-groove edges. Thicknesses range from ⅜" to 1⅛". Though OSB is generally made

with a waterproof adhesive, the panels are not suited for long-term exposure to the weather. OSB sheathing should be covered as soon as is practical. To increase its moisture resistance, the edges are often coated at the factory with a sealant.

Like most wood products, OSB will shrink or swell slightly with changes in humidity. It is more likely to change in thickness than plywood. Sheathing and subflooring should be installed with a ⅛" gap between the ends of adjacent panels and ¼" at the sides. If the edge seal is damaged during storage or installation, moisture can wick into the panel and swell its edges.

Panels at a job site should not be stored directly on the ground. Instead, they should be stacked on a level platform supported by 4×4 stringers or other blocking. They should be covered loosely with a waterproof tarp as soon as possible. The tarp should be arranged so as not to trap ground moisture beneath it. The steel banding that secures the panels during delivery should be cut right away to prevent the edges from being damaged if swelling occurs.

Fiberboard The term fiberboard generally includes panel products such as hardboard and medium-density fiberboard. To make fiberboard, logs are chipped into small pieces of wood that are then reduced to fibers by steam or mechanical processes. These fibers are refined and mixed with an adhesive. They are then compressed under heat and pressure to produce panels. A fiberboard product will not split, crack, or splinter. It is dense, with extremely smooth front and back surfaces, and has superior wear resistance.

Hardboard *Hardboard* is a high-density fiberboard that is often used for such things as interior paneling, flooring underlayment, and cabinet back panels. The manufacturing process is similar to that used for paper. A slurry (a mixture of fibers and water) is formed into a mat. The mat is then compressed in several stages under pressure and steam heat until the final panel is formed. In some cases, binders or adhesives do not have to be added to the mat. The lignin in the wood fiber, when heated and pressed, serves as a natural adhesive.

Hardboard is generally available in standard and tempered grades. *Standard hardboard* is given no additional treatment after manufacture. It has high strength and good water resistance. It is sometimes used in cabinetwork because it has a very smooth surface. *Tempered hardboard* is standard hardboard to which linseed oil or tung oil has been added prior to pressing. This process improves stiffness as well as scratch and water resistance.

Hardboard is manufactured with one or both sides smooth. Hardboard with one side smooth is known as *S1S*. Hardboard with two sides smooth is *S2S*. It is available in thicknesses from ⅛" to ⅜". The standard panel size is 4' × 8', but widths up to 6' and lengths to 16' are also available. *Perforated hardboard* has very closely spaced holes punched or drilled into it. The holes can be fitted with metal hooks, holders, supports, or similar fittings, as shown in **Figure 13-14**. Wood-grain hardboard is printed to match the color and texture of oak, walnut, mahogany, and many other woods. It is popular for interior paneling.

Medium-Density Fiberboard (MDF) **Medium-density fiberboard (MDF)** is made of compressed wood fibers mixed with

JOB SAFETY

ADHESIVE DUST When machining or sanding a composite product or the edges of plywood, wear a dust mask. This will prevent you from inhaling dust from the adhesives used in the panel's manufacture. Excessive exposure to these adhesives is a health hazard. This is especially important with products that generate very fine dust, such as particleboard, MDF, and fiber-cement board.

Go to **glencoe.com** for this book's OLC for more on job safety.

Figure 13-14 Perforated Hardboard
Storage Board Perforated hardboard is often used with metal hooks to store tools.

JOB SAFETY

WORKING WITH MDF Because MDF sawdust is extremely fine, it is important to wear appropriate dust protection when cutting or sanding. MDF is quite dense. A ¾" thick, 4' × 8' panel is heavy and can be awkward to lift or transport. Take precautions to avoid backstrain when lifting this product.

Go to **glencoe.com** for this book's OLC for more on job safety.

ureaformaldehyde adhesive. Because of the uniformity of the fibers used in the manufacturing process, MDF panels have a uniform thickness and an extremely smooth surface. This makes them ideal for use where the end product will be painted, such as door panels and cabinetry. Painted cabinet doors that appear to be frame-and-panel doors are often made of MDF, for example. Though considered a type of fiber-board, MDF is manufactured in a way similar to that used for particleboard. MDF can be worked with standard cutting tools, but carbide-tipped saw blades give the best results.

Particleboard Particleboard is used indoors wherever a smooth and relatively inexpensive surface is required. It is often used as a cabinet carcase material and as a substrate to which other materials are applied. It is also used as a substrate for plastic laminate countertops because of its unusually smooth surface. Construction particleboard is made by combining wood particles or flakes with adhesives and hot-pressing them into panels. The particles near the top and bottom surfaces are relatively fine. Somewhat coarser particles are located at the core. This construction is not obvious, however. Because the particles do not interlock the way fibers do, particleboard is not as strong as MDF and OSB. When stressed beyond certain limits, fasteners may pull out of the material. As with OSB, small amounts of wax may be added to the material during manufacture to improve its water resistance.

During manufacturing, density, adhesives, and moisture content can be controlled to produce a variety of products, as shown in **Table 13-3** on page 352. Stock panels range in density from 24 to 62 pounds per cubic foot. Ordinarily, a high-density panel will also have greater strength and a smoother, tighter edge than a low-density panel. Panels range from ¼" to 1½" thick, from 3' to 8' wide, and up to 24' in length. They come in ten different grades and three different densities (high, medium, and low).

Fiber-Cement Board *Fiber-cement board* differs from other engineered panel products. Instead of formaldehyde-based adhesives, its cellulose fibers are bound together with a mixture of Portland cement, ground sand, additives, and water. The panels are as efficient, uniform, and predictable as the other panel products discussed in this chapter. They are considered non-combustible and rot proof.

The standard fiber-cement panel is 5⁄16" thick and very dense. It comes in sheets 4' wide, and 8', 9', 10', or 12' long. One side is typically very smooth, while the other is rougher, but finishes of various textures are available. Its smooth finish, along with its stability, make fiber-cement board desirable for use as siding. It is available as lap siding as well as in shingle siding patterns.

Joe Mallon

Table 13-3: Uses for Particleboard		
Type	**Composition**	**Uses**
Corestock	Flakes or particles bonded with urea-formaldehyde or phenolic resins; has various densities and related properties	Furniture, casework, architectural paneling, doors, and laminated components
Wood-veneered particleboard	Corestock overlaid at the mill with various wood veneers	Furniture, panels, wainscots, dividers, cabinets, etc.
Overlaid particleboard	Particleboard faced with impregnated fiber sheets, hardboard, or decorative plastic sheets	Furniture doors, wall paneling, sink tops, cabinetry, and store fixtures
Embossed particleboard	Surfaces are heavily textured in decorative patterns by branding with a heated roller	Doors, architectural paneling, wainscots, display units, and cabinet panels
Filled particleboard	Particleboard surface-filled and sanded; ready for painting	Painted end-products requiring firm, flat, true surfaces
Primed or undercoated particleboard	Factory-painted base coat on either filled or regular board; exterior or interior	Any painted products
Floor underlayment	Panels specifically engineered for floor underlayment	Underlay for carpets or resilient floor coverings

Handling and Cutting Fiber-cement panels should be stored under cover on a dry, level surface. Steps should be taken to protect the edges and corners because they can be damaged if struck. The panels can be awkward to transport because they are thin, somewhat flexible, and quite heavy. For comfort and safety, each panel should be carried on edge by two people.

Panels can be cut with special shears but carbide-tipped circular saw blades are more often used. However, cutting with a blade generates a great deal of very fine dust that cannot be contained by standard dust bags.

JOB SAFETY

DUST MASKS Always wear a dust mask when cutting fiber-cement products. If large quantities of dust are generated, a respirator may be necessary. Special dust collection accessories are available for circular saws.

Go to **glencoe.com** for this book's OLC for more on job safety.

Fiber cement contains silica. Breathing excessive amounts of silica dust can lead to an illness called *silicosis*.

Engineered Lumber Basics

Where should engineered lumber not be used?

Engineered lumber is any manufactured product made of solid wood, wood veneer, wood pieces, or wood fibers in which the **components** have been bonded together with adhesives. Engineered lumber products are stiff, strong, dependable, and versatile. They are increasingly popular as substitutes for solid lumber (see **Figure 13-15**). Engineered lumber products include:

- Laminated-veneer headers and I-joists.
- Glue-laminated beams.
- Finger-jointed studs.
- Laminated-strand lumber posts.
- Oriented-strand lumber window framing stock.

Engineered products are often used in combination with conventional materials. For example, a house might be built with

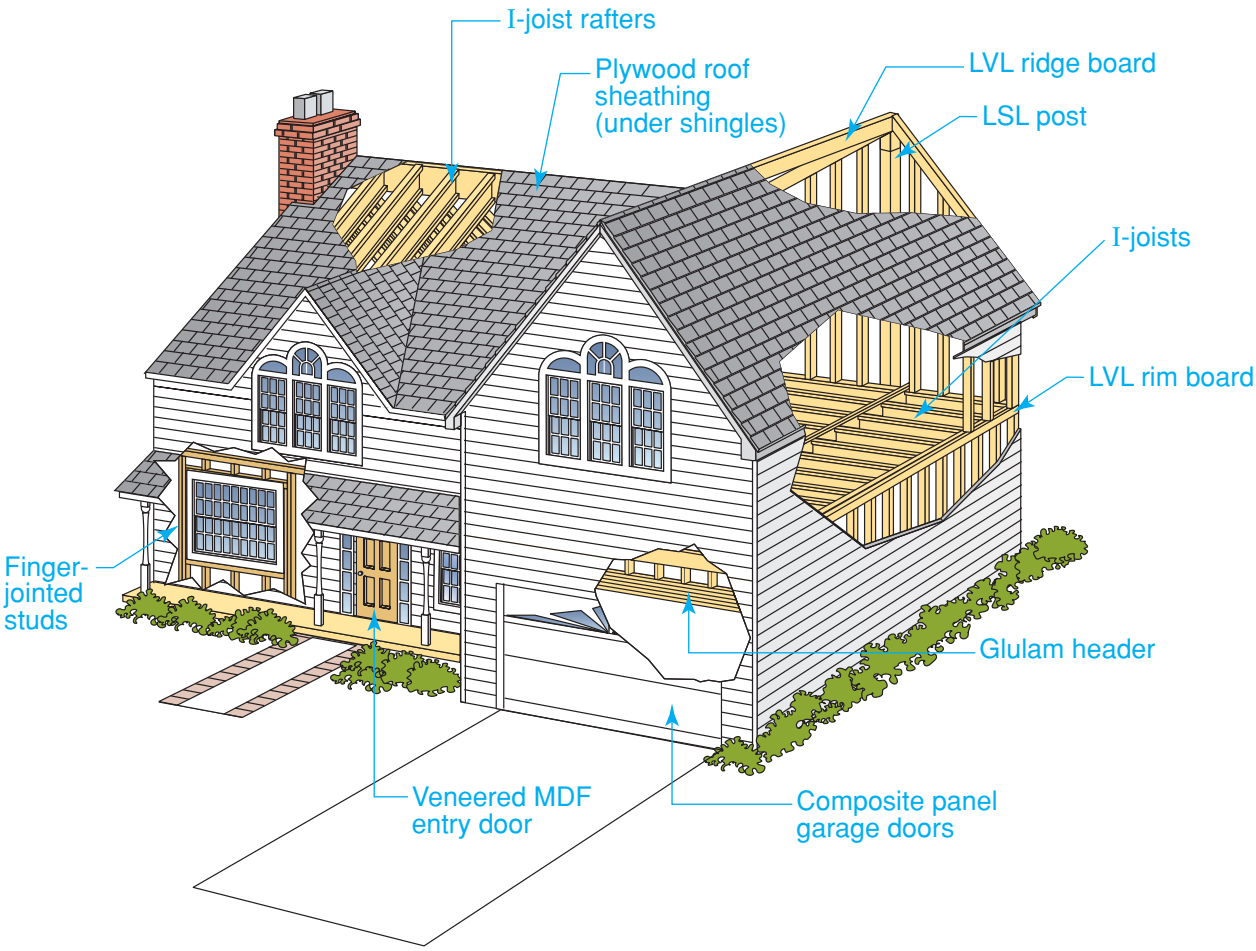

Figure 13-15 Engineered Wood Products
Around the House Engineered wood products have many structural and finish uses.

engineered lumber floor joists and solid lumber rafters. Engineered lumber has the following advantages:

- It uses wood that might otherwise be wasted.
- Its performance is highly predictable.
- It is available in a wide variety of dimensions and in unusually long lengths.
- It is free of the defects often found in solid lumber.

Engineered lumber is not suitable for all purposes. It should not be used where it will be permanently exposed to the weather. In addition, engineered lumber should not be installed in direct contact with concrete or masonry.

Engineered lumber is made by various manufacturers. Always consult the manufacturer's instructions for handling, care, and usage information. Check local building codes for any restrictions on usage.

Laminated-Veneer Lumber

What does the "I" in I-joist represent?

Laminated-veneer lumber (LVL) is a family of lumber products made with wood veneer as the basic element. LVL products are lightweight, rigid, and available in lengths of up to 66'. To make LVL, layers of veneer are glued together in various ways.

Figure 13-16 Laminated-Veneer Lumber
Two Products LVL products include I-joists (left) and header stock (right).

In this respect, LVL products are similar to plywood. However, LVL products are used for beams, headers, joists, and rafters instead of as panel products, as shown in **Figure 13-16**. LVL is now common in both residential and commercial construction.

Manufacturing Methods

Laminated-veneer lumber products are made in plants in the United States and Canada. Any species of wood may be used, depending on availability and the manufacturer's preference. Sheets of veneer are moved through large, open-ended drying ovens. They are dried until they have a moisture content of about 8 percent. As each sheet leaves the drying oven, it is checked for quality and graded.

The veneer is then fed into an automatic glue spreader. The spreader coats the top of each sheet with an exterior-grade adhesive. As the glued sheets are assembled, the highest-grade veneers are placed at the top and bottom of the stack. This increases the overall strength of the finished product. The sheets are then fed into a machine that uses heat and pressure to cure the adhesive. The resulting material, called a *billet*, may be up to 80' long. Billets are then cut into stock shapes and sizes for headers, beams, or portions of wood I-joists.

Finished LVL products are typically shipped to materials dealers in 60' lengths. When a builder orders LVL products, the dealer cuts them to common lengths in increments of 2' and delivers them to the job site. The builder then cuts them to shorter lengths if necessary.

Performance

A cross section of laminated-veneer lumber looks similar to a cross section of plywood, as shown in **Figure 13-17**. There is, however, an important difference. Plywood is cross laminated. This means that the grain of each layer runs perpendicular to the grain of adjoining layers. In contrast, the grain of every layer in LVL runs in the same direction. This is called *parallel lamination*, and it produces a material that is more uniform. It also means that the end grain of each veneer layer is exposed only at the ends of the product.

Figure 13-17 Cross-Section of LVL Stock
Up Close A close-up view of the layers in an LVL product.

David R. Frazier Photolibrary, Inc.

Pieces of solid lumber may shrink or swell in slightly different degrees after leaving the mill. However, the qualities of each piece of LVL stock can be controlled. This means that LVL products are very predictable in their performance. Each piece of LVL behaves exactly like the other pieces in a load. For example, if there is any swelling, all the LVL pieces will swell by the same percentage. As a result, architects and engineers can better control the structural soundness of buildings. LVL is stronger and stiffer than solid lumber of the same size. It replaces solid lumber in many building code requirements.

Care and Handling Laminated-veneer products are produced using waterproof adhesives. They can withstand normal exposure to moisture during the construction process but should not be exposed to moisture needlessly. Most LVL products are wrapped in protective material for transport to the job site. Do not remove this wrapping until you are ready to install the materials.

Do not store LVL products in direct contact with the ground. Rest the bundles on stickers to encourage air circulation and to prevent contact with ground moisture, as shown in **Figure 13-18**.

Figure 13-18 Storing LVL Products
High and Dry LVL products should be protected from moisture until it is time to install them.

I-Joists and Rim Boards

One of the most common laminated-veneer lumber products is the *I-joist* (as seen in Figure 13-16 on page 354). A *joist* is a type of beam used to support a floor, ceiling, or roof. Seen on end, an I-joist is shaped like the letter *I.* Its vertical member is called the *web.* The two horizontal members are called *flanges.* I-joists are most often used in floor construction to support subflooring. They can also be used in place of rafters in roof construction, as shown in **Figure 13-19** on page 356.

The construction of an I-joist varies according to the manufacturer. The top and bottom flanges may be made of solid lumber or laminated-veneer lumber. I-joist flanges range from 1½" to 3½" in width. The web may be made from sections of structural ⅜" plywood or oriented-strand board (OSB). Waterproof adhesive is used to attach webs to flanges. No nails or staples are used. LVL I-joists are commonly available in depths of 9½", 11⅞", 14", and 16".

I-joists have several advantages over solid lumber joists. Because they are available in long lengths, a single I-joist can run the entire width of a house. This removes the need to overlap joists at the center of the floor system. It also reduces the number of separate pieces that must be handled. The flooring system can be installed faster. An I-joist is lighter in weight than an equal length of solid lumber. This makes it easier to carry. For example, an I-joist 26' long and 9½" deep weighs about 50 lbs. A piece of 2×10 solid lumber of the same length weighs about 96 lbs.

Installation I-joists are made by a number of manufacturers. Each manufacturer provides span tables and recommended installation details. A *span table* is a list of distances that a particular structural product can span between structural supports, such as walls or columns. In addition, the trade association of engineered wood manufacturers provides span tables for "performance rated" products that it

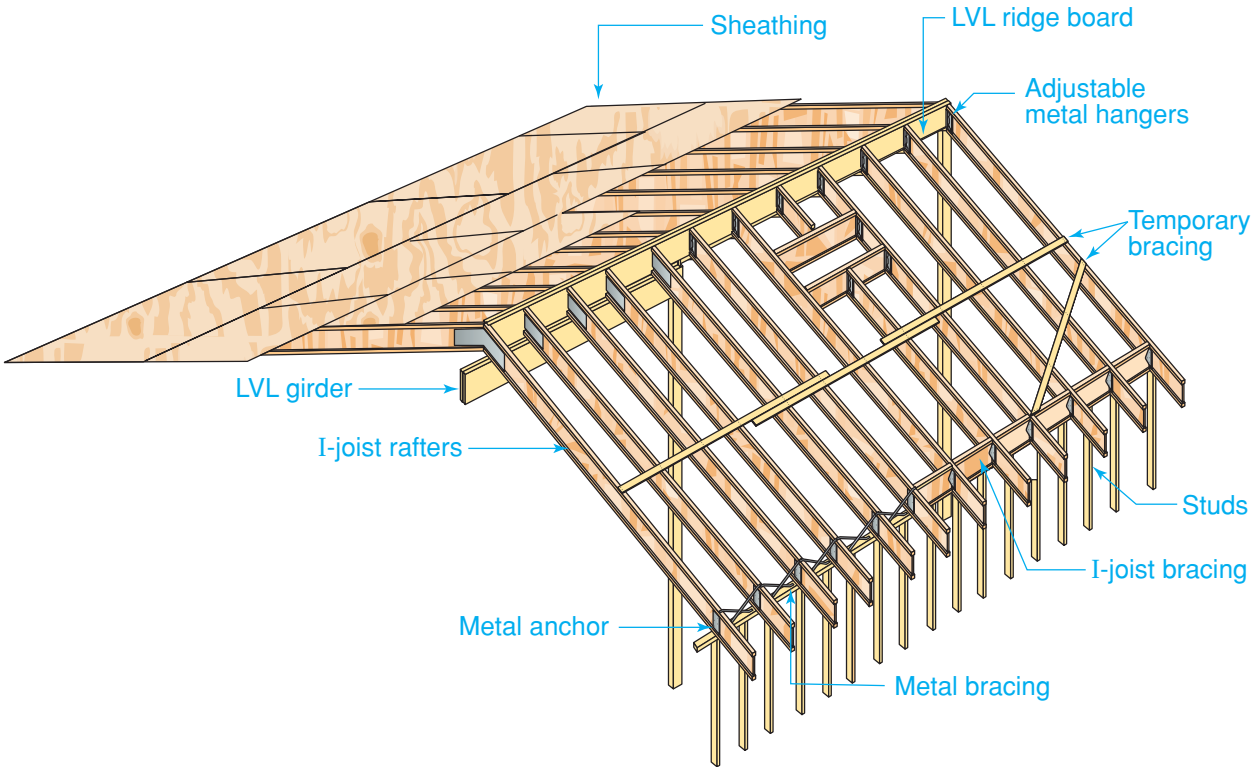

Figure 13-19 I-Joist Roof Framing

Roof Details When I-joists are used to frame a roof, they must be braced until the sheathing can be applied. This prevents them from tipping.

promotes. Be sure to use the span tables for the specific product you intend to use. The following installation methods are typical, but do not apply to every I-joist product.

The web of an I-joist is not in the same plane as its flanges, so take care when cutting the product. For crosscutting, the easiest method is to use a radial-arm saw or a large slide-type miter saw (see Chapter 5, Section 5.3 for information about these tools). To cut I-joists safely with a circular saw, you must prevent the shoe of the saw from lodging against a flange during the cut. You can do this by placing a wood block against the web and between the flanges, as shown in **Figure 13-20**. You can then cut the I-joist with ease. The I-joist manufacturer may also supply a cutting guide.

In general, each I-joist should be nailed into place as it is installed, then braced temporarily if necessary. Permanent bracing is provided by the sheathing, by the rim board, and by cross-bracing. If **temporary** bracing is required before the sheathing is in place, install it as shown in Figure 13-19. The method is as follows:

1. Use stock at least 1' × 4' in size.
2. Braces should be at least 8' long. Space them no more than 8' on center.
3. Secure each brace into the top of each I-joist using two 8d nails.
4. Nail the bracing to a lateral restraint, such as an existing subfloor or a braced end wall, at the end of each bay.
5. Lap the ends of adjoining bracing over at least two I-joists.

I-joists used in floor construction are installed in a way similar to solid lumber joists. They can be nailed to the plate by toe-nailing through the lower flange or secured by metal joist hangers. (For more on joist hangers and similar metal connectors, see Chapter 14, "Structural Systems".) They can be braced with solid blocking, I-joist blocking, or metal cross-bracing.

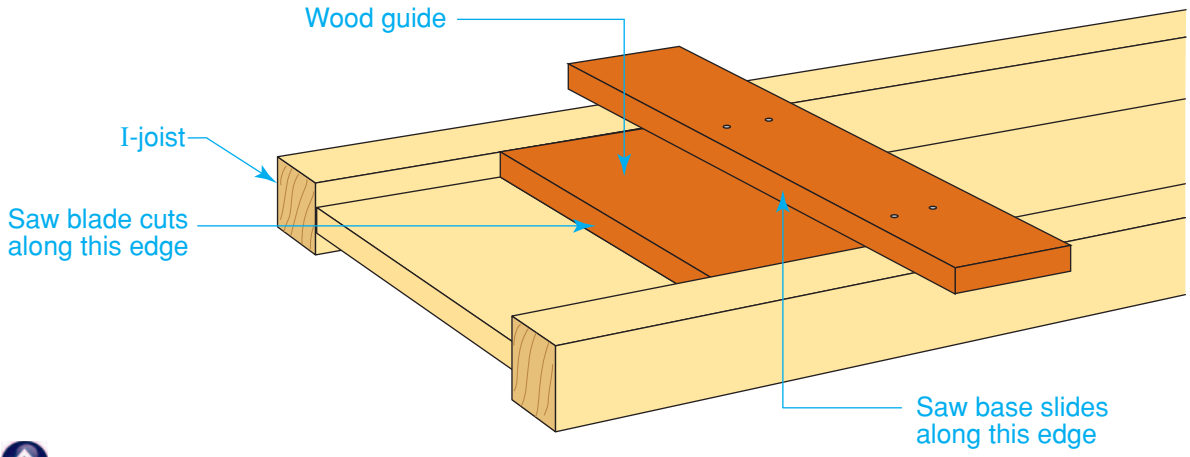

Figure 13-20 I-Joist Saw Guide
Cutting Guide A wood guide will prevent a circular saw's shoe from lodging against a flange.

When using joist hangers, keep several factors in mind. Joist hangers are generally nailed to the I-joist with 10d common nails. Never drive nails sideways (parallel to the layers) into an I-joist flange. This tends to split the layers, reducing the strength of the joist. Instead, drive nails into the flange at a 45° angle, as shown in **Figure 13-21**.

In some cases, you must permanently install thin blocks of wood against both sides of the web. These are called *web stiffeners, bearing blocks,* or *squash blocks.* They reinforce the web and prevent it from buckling at points of high stress. For example, stiffeners are often placed where an I-joist crosses a mid-span support, such as the girder shown in **Figure 13-22**. A stiffener used in this way is called a *bearing stiffener*. In other cases, stiffeners are installed where a concentrated load is expected from above, such as from a load-bearing post. This would be called a *load stiffener.* Stiffeners should be at least 2 15/16" wide. Their thickness varies according to the width of the I-joist flange. For example:

- A flange 1½" wide calls for stiffeners at least 15/16" thick.
- A flange 2 15/16" wide calls for stiffeners at least 1" thick.
- A flange 3½" wide calls for stiffeners at least 1½" thick.

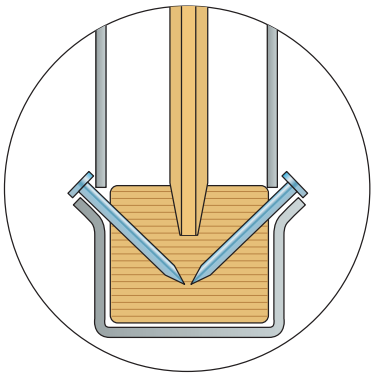

Figure 13-21 I-Joist Nailing
Angle Nails Drive nails through an I-joist flange from both sides at a 45° angle to avoid splitting the stock.

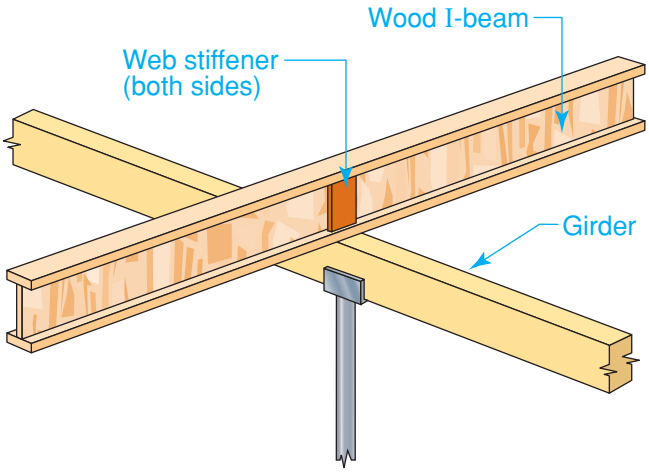

Figure 13-22 Web Stiffener
Stress Relief Web stiffeners should be installed on both sides of the web where the I-joist crosses a support.

The web of a wood I-joist often has pre-scored knockouts located about 12" on center (OC) along its entire length. You can punch these out with a hammer to create passages for plumbing and electrical lines. This removes the need for time-consuming drilling or notching. Additional holes can be cut along the length of the web, but *only* according to the manufacturer's instructions.

Rim Boards When a floor is framed with conventional lumber, the ends of the floor joists are connected with solid lumber of the same size. This lumber is called a *rim joist.* Solid-lumber rim joists do not work with flooring systems framed with I-joists. This is because the two products expand and shrink differently. A rim board is used instead. A rim board is a length of engineered wood stock that has the same depth as the I-joists, as shown in **Figure 13-23**. Rim boards are often made from laminated-veneer lumber. They may also be made from plywood, OSB, or laminated-strand lumber. They are available in thicknesses that range from 1" to 1½".

Care and Handling It is important to store and carry I-joists on edge because they are fairly weak in lateral strength. Storing or carrying an I-joist on its side or allowing it to flex back and forth could break the glued butt joints that join individual sections of web. This would severely weaken the product. Two people should work as a team to carry unusually long I-joists, as shown in **Figure 13-24**.

When I-joists are first delivered to the job site, do not open the protective covering around each bundle. Instead, open or remove it shortly before the I-joists are to be installed. The covering protects them from weather and reduces the chances of damage. If bundles are stacked, separate them with stickers. Before installing an I-joist, inspect it to make sure it has not been damaged during storage.

JOB SAFETY

CUTTING I-JOISTS Never notch or drill into the top or bottom flanges of an I-joist. This could weaken the product to the point of failure. Never install a damaged I-joist.

Go to **glencoe.com** for this book's OLC for more on job safety.

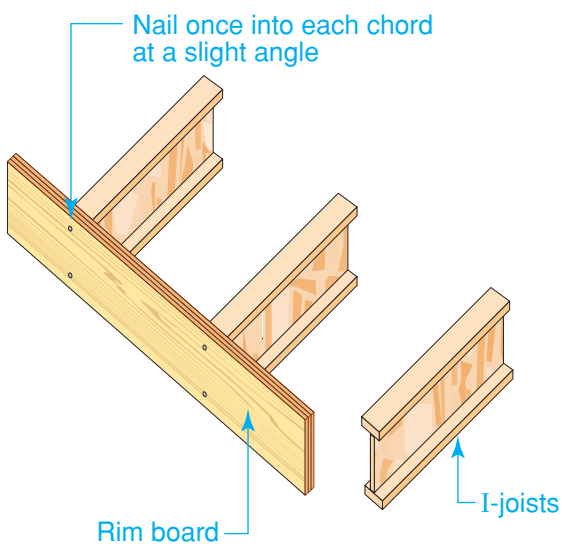

Figure 13-23 Rim Board
End Cap An LVL rim board is used to tie the ends of I-joists together.

Figure 13-24 Carrying an I-Joist
Teamwork I-joists are light in weight but one person cannot properly carry long lengths. Take care not to let the I-joist flex back and forth too much.

JOB SAFETY

I-JOIST FLOORS An I-joist floor system will not support the weight of workers until it has been sheathed. Plan the work so that no one will need to walk atop I-joists until the sheathing is in place.

Go to **glencoe.com** for this book's OLC for more on job safety.

I-Joist Performance Ratings Instead of carrying a standard grade stamp, I-joists are stamped to identify a specific performance standard it meets. In construction, a *performance standard* is a standard that defines the required behavior of a specified building component. The position of this stamp varies by manufacturer but is often located on the flange. In some cases, the stamp may include additional information such as the maximum on-center spacing permitted for the product.

LVL Headers and Beams

Laminated-veneer lumber can be used like solid lumber for many purposes. It is most often used to replace solid-wood or built-up-wood headers and beams. LVL header and beam stock comes in various thicknesses. Stock that is 1¾" thick is most common in residential work. When two pieces are combined, they equal the thickness of a standard 2×4 wall. LVL headers and beams commonly range in depth from 5½" to 18", as shown in **Table 13-4**.

Cutting and nailing LVL stock requires the same tools as those used with solid lumber. When nailing LVL headers face to face, use three rows of 16d nails spaced 12" on center. Some builders have found that the nail-holding ability of LVL headers and beams is greater than that of solid lumber.

LVL headers can be cut to length on site, using carbide-tipped blades. However, holes should not be cut in LVL headers or beams without consulting the manufacturer's recommendations.

Table 13-4: Common LVL Headers and Beams

Depth (inches)	Thickness (inches)
5½, 7¼, 9¼, 9½, 11¼, 11⅞, 14, 16[a], 18[a]	1¾, 3½
9½, 11⅞, 14, 16[a], 18[a]	5¼

[a]16" and 18" beams should be used only in multiple thicknesses.

Section 13.2 Assessment

After You Read: Self-Check

1. How does a composite panel differ from a plywood panel?
2. Why is fiber-cement board used as a siding material?
3. What are some common uses of LVL products?
4. What are two uses of I-joists?

Academic Integration: Mathematics

5. **Using a Construction Calculator** Use a construction calculator to calculate the number of board feet in 24 pieces of lumber that measure 2" × 10" × 22'.

   Math Concept The board foot is the basic unit of lumber measurement. One board foot is equal to a piece of lumber that measures 1" × 12" × 12". You can use the Bd. Ft. function on a construction calculator to convert the product to board feet.

Go to **glencoe.com** for this book's OLC to check your answers.

Section 13.3

Other Types of Engineered Lumber

Glue-Laminated Lumber

What is "glulam" short for?

When layers of lumber are glued together, their strength and stiffness are greater than that of solid lumber of an equal dimension. This is the principle behind the glue-laminated beam, shown in **Figure 13-25**. A glue-laminated beam is often called a **glulam**. A glulam is stronger than a steel beam. Glulams can take various forms and span great distances. These characteristics make them useful in both residential and commercial construction. They are used for garage door headers, patio door headers, carrying beams, window headers, and even exposed stair stringers. Glulam posts are also available. Glulams are very fire resistant and do not ignite easily. If they do catch fire, they burn slowly. In some fires where an unprotected steel beam fails completely, a glulam will **retain** much of its strength.

Manufacturing Methods

Glulams are made by gluing lengths of dimension lumber together. The individual layers are adhered face to face, clamped together, and allowed to cure at room temperature. The grain of all layers is parallel along the length of the beam. Each layer is generally no more than 1½" thick. The woods most commonly used for glulams are southern yellow pine and Douglas fir.

The best quality material is used in the top and bottom layers, as shown in **Figure 13-26**. This improves the strength of

A

B

Figure 13-25 Glue-Laminated Beams
Long Spans Glulam beams can be manufactured as curved beams (**A**) or as straight beams (**B**).

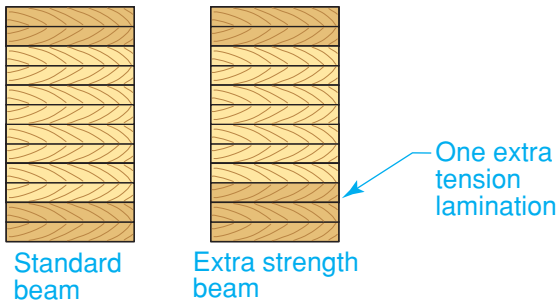

Figure 13-26 Layers of a Glulam
Improving a Beam Precise layering of high-quality wood improves the strength and fire resistance of a glulam.

a glulam by nearly 100 percent as compared to random layering. When a one-hour fire rating is required, additional layers of high-quality lumber are placed on the bottom of the beam.

Glulams are sometimes manufactured with a slight upward curve, as shown in **Figure 13-27**. This curve is called **camber**. The beam must be installed with the curve oriented up. When the beam is in place and fully loaded, the curve straightens out. The amount of camber in any glulam varies according to its length. Camber is measured in the following two ways:

- ***Inches of camber*** The actual amount of camber is measured in inches at the center of the beam. It is the amount the beam curves above a flat surface.
- ***Radius of curvature*** The camber of a glulam represents a segment of a huge circle. Stock beams used in residential construction are cambered based on a radius of 3,500'. In commercial construction, this radius may be 1,600' or 2,000'.

JOB SAFETY

LIFTING GLULAMS Glulam beams are commonly loaded and unloaded with a fork lift. For greater stability, the sides of the beams, rather than the narrower edges, should rest on the forks.

Go to **glencoe.com** for this book's OLC for more on job safety.

Grades

Four grades of glulams are generally available. The differences among the grades are based on appearance. There are no differences in strength. As the appearance of the beam becomes more important, its cost increases.

- *Framing grade glulams* are intended for use where they will not be seen. They are available in widths that fit flush with 2×4 or 2×6 framing.

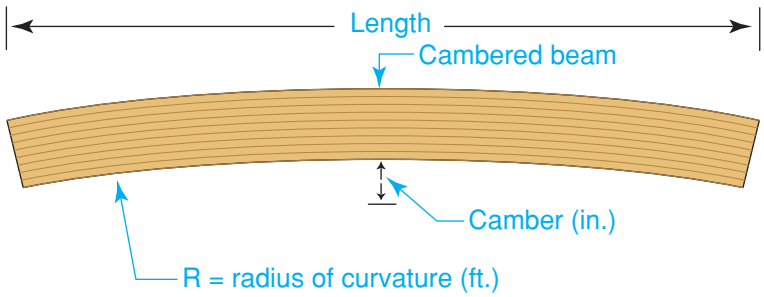

Figure 13-27 Glulam Camber
Upward Curve In this drawing, the curve (camber) of the glulam has been exaggerated.

Mathematics: Calculation

Radians of a Circle Glulams can be measured by *radius of curvature.* The most common way to measure angles is in degrees. A circle contains 360 degrees, and there are 90 degrees in a right angle. However, some engineers measure angles in radians. The size of a radian is determined by the requirement that there are 2π radians in a circle. This means that 2π radians equals 360 degrees. One radian is $\frac{180°}{\pi}$ degrees. How many degrees are in $\frac{\pi}{3}$ radians?

Starting Hint To convert from radians to degrees, multiply by the radian $\frac{180°}{\pi}$. Solve for ? in the following equation:

$$\frac{\pi}{3} \times \frac{180°}{\pi} = ?$$

- *Industrial grade glulams* are for areas in which appearance is not of much importance. Voids (gaps) may appear on exposed edges. Beams are surfaced only on the sides.
- *Architectural grade glulams* are used where appearance is more important. Some voids are permitted, but any over ¾" in diameter will be filled. All exposed faces are surfaced, and the exposed edges are eased (slightly rounded over).
- *Premium grade glulams* are available only as a custom order. They are used where appearance is very important. All knotholes and voids are filled. All exposed faces are surfaced, and the exposed edges are eased.

Specifying Glulams When glulams are specified or ordered, width and depth are the most important factors. Stock beams are manufactured in widths of 3⅛", 3½", 5⅛", 5½", and 6¾". Depths range from 9" to 36". It is also important to specify whether any camber is necessary or whether the glulam should instead be flat. Custom glulams can be ordered if an unusual strength, length, shape, or degree of camber is required.

Builder's Tip

SUNLIGHT EXPOSURE Excessive exposure to direct sunlight can cause the wood in a glulam beam to fade in color. If a glulam beam will be visible in the completed structure, wrap it in an opaque covering prior to installation.

FRP Glulams A new type of glulam beam is being used in light commercial construction. Though it is not yet used in residential construction, the technology may eventually find applications there. The addition of fiber-reinforced polymers (FRP) to a glulam significantly improves its bending strength and its stiffness. This also reduces the cost of the beams and requires less wood than an unreinforced glulam of the same size. The FRP layers are glued into place as the beam is manufactured.

Storage and Installation

Glulams generally leave the mill with a moisture content of 12 percent. Before shipping, they are sealed, primed, or wrapped in water-resistant paper. The ends are sealed to limit moisture penetration. When a beam must be stored on site before installation, support it off the ground. It can be stored on edge, but laying it flat reduces the chance that it will tip over accidentally. If the beam is wrapped in protective paper, make small slits in the underside to allow moisture to drain and to encourage air circulation.

Take care to install glulams properly. They must not be notched or drilled in any way unless this has been accounted for in their design. If a beam must be cut to length on site, the cut ends should be sealed according to the maker's specifications. Heavy-gauge metal framing connectors are often used to support glulams.

Other Engineered Lumber Products

Why is it becoming difficult to find lumber of consistent quality?

In addition to LVL and glulam products, other engineered structural products are available. They include finger-jointed lumber and a family of products based on a mix of wood strands and adhesive. For installation details on any of these products, review the product literature provided by each manufacturer. Find out if the products are accepted by the building codes in your area.

Finger-Jointed Lumber

It is increasingly difficult to find framing lumber of the consistent quality that was once available. This is partly due to the heavy demand for wood products, but it is also a result of decreasing forest resources. To help meet demand, *finger-jointed lumber*, sometimes referred to as *structural end-jointed lumber*, has been developed. Lengths of solid wood are joined end to end. A **finger joint** is a closely spaced series of wedge-shaped cuts made in the mating surfaces of lumber. These cuts create a large surface area that results in a strong glue bond between the two parts, as shown in **Figure 13-28**.

Finger-jointed lumber has several important characteristics:

- It is always straight.
- It can be sawed and nailed exactly like solid lumber.
- It makes use of short pieces of wood that might be otherwise wasted.
- It is available in longer lengths than standard lumber.

Finger-jointed products are available for use as wall framing lumber, paint-grade interior molding, and exterior trim.

Finger-Jointed Studs The grading agencies that supervise the manufacture of standard lumber also supervise finger-jointed lumber. Each piece of finger-jointed lumber should be marked with a grade stamp, as shown in **Figure 13-29**. The stamp indicates the grade of wood, its species, and the type of glue used in the joints. Building codes generally treat lumber with *certified exterior joints* as if it were standard lumber. It can be used interchangeably with standard lumber of the same size, species, and grade. This type of finger-jointed lumber uses exterior-grade adhesives and the fingers are ⅞" to 1⅛" long.

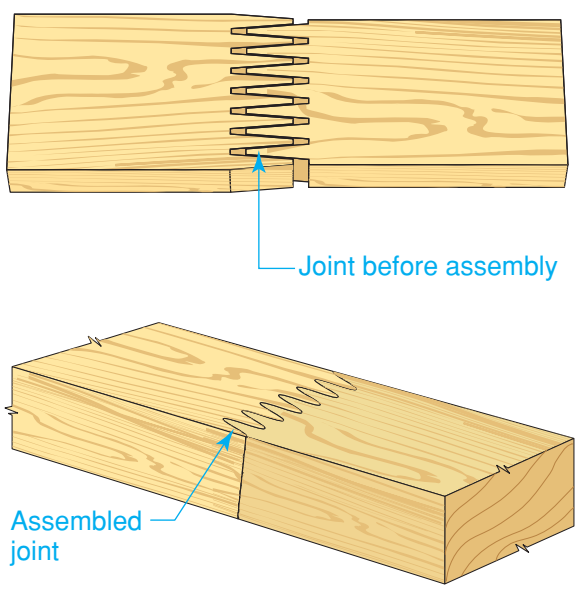

Figure 13-28 Finger-Jointed Lumber
Interlocking Joints Finger-jointed lumber consists of many short pieces of solid wood joined together.

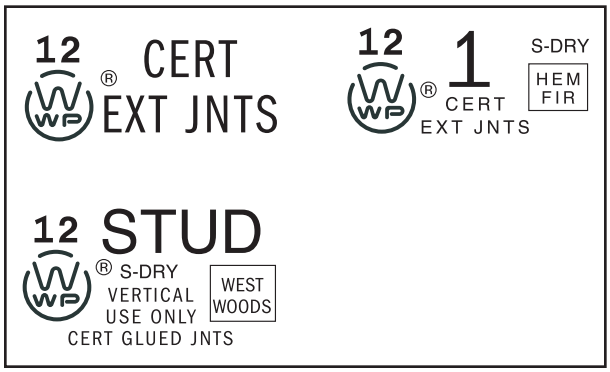

Figure 13-29 Grade Markings for Finger-Jointed Lumber
Board Information These three grade stamps are typical of those found on finger-jointed lumber.

Lumber with *certified glued joints* is suited to vertical use only. It should not be used in any horizontal application. Finger-jointed lumber of this type is sometimes stamped "STUD USE ONLY" or "VERTICAL USE ONLY." This type of lumber does *not* use exterior-grade adhesives. Its fingers are ⅜" to ⅝" long. You should never store such lumber where water might collect in the stack for prolonged periods. Store this product indoors or under cover until you are ready to use it.

Finger-jointed studs are manufactured in sizes of 2×2, 2×3, 2×4 (the most common size), 3×4, and 2×6. They may be up to 12' long. Some manufacturers assemble finger-jointed lumber from oversize blocks of wood and then saw the studs to standard dimensions. Thus a 2×4 will measure 1½" by 3½". Other manufacturers assemble the lumber from short pieces of 2×4 lumber and then plane 1/32" off both edges to ensure smooth surfaces. A finger-jointed 2×4 made using this method would measure 1½" by 3 7/16". This smaller size must be indicated on the grade mark.

Figure 13-30 Laminated-Strand Lumber
Short Strands The surface of LSL has an appearance similar to oriented-strand board panels.

Laminated-Strand Lumber

Laminated-strand lumber (LSL) is made of wood strands glued together and cut to uniform dimensions, as shown in **Figure 13-30**. Its performance is predictable. It can be used for rim boards, studs, plates, headers, beams, and columns.

An LSL product is typically made from fast-growing aspen or yellow poplar, though small amounts of other hardwoods may be included. After debarking, logs are processed into wood strands from 0.03" to 0.05" thick, 1" wide, and about 12" long. The strands are dried and sorted to remove waste and pieces that are too short. The dried strands are coated with a blend of adhesive and wax. The coated strands are then formed into a thick mat. The mat is cut to a 35' or 48' length and formed under heat and pressure into a billet. A billet is a long block of manufactured wood that will be cut into smaller pieces. When cooled, the billet is sanded and cut to lengths of up to 22'. The finished LSL lumber is then marked with a grade stamp.

Parallel-Strand Lumber

Parallel-strand lumber (PSL), shown in **Figure 13-31**, is a product that can be used for columns, studs, and beams. The wood comes from Douglas fir, western hemlock, southern pine, or yellow poplar logs. The logs are cut into 8' lengths, then rotary-peeled into veneer with a thickness of 1/10" or ⅛". The veneer is then cut into large pieces, dried, and sliced into ribbon-like strands about 1" wide and up to 8' long. Unwanted short strands and other waste are removed.

The strands are then coated with an adhesive mixed with a small amount of wax. The wax helps to keep out moisture. Strands are laid parallel and built up into a mat. The mat

is then compressed and the adhesive is cured using microwave energy. The resulting billet may be as much as 11" thick. When cool, it is cut to size and sanded. The pieces are grade stamped and coated with a sealant to further slow moisture intake.

Oriented-Strand Lumber

A relatively new engineered lumber product is called *oriented-strand lumber (OSL).* It is similar to oriented-strand board (OSB) except that the strands are aligned along the length of the product. It is also similar to laminated-strand lumber except that the strands are shorter. Its uses are still being developed but the material has been used to form the core of entry doors, the structural frame of windows, and the framework of upholstered furniture.

Figure 13-31 Parallel-Strand Lumber
Veneer Strands PSL lumber is often used for beams, headers, and columns.

Section 13.3 Assessment

After You Read: Self-Check

1. What are some common uses of glulams in residential and commercial construction?
2. What are four important characteristics of finger-jointed lumber?
3. Name the two basic types of finger-jointed lumber.
4. What types of woods are used to make laminated-strand lumber and parallel-strand lumber?

Academic Integration: English Language Arts

5. **Building Codes** Building codes regulating the use of finger-jointed studs vary. Research your local building codes to find out if finger-jointed studs are approved for use in your area. Make note of any restrictions. Record your findings in a one-page summary.

Go to glencoe.com for this book's OLC to check your answers.

Tim Fuller

CHAPTER 13

Review and Assessment

Chapter Summary

Section 13.1

Plywood is made from layers of wood veneer called plies. Construction plywood grades are based on type of adhesives, veneer quality, wood species, construction, size, performance, and special characteristics. Plywood may be made from either softwood or hardwood.

Section 13.2

Composite panels are made from pieces of wood mixed with adhesives and joined under heat and pressure. Composites include oriented-strand board, fiberboard, particleboard, and fiber-cement board. Some panels are given special finishes. Engineered-lumber products are often used in combination with conventional materials. Laminated-veneer lumber (LVL) is a family of engineered products made with wood veneer. One common LVL product is the I-joist, used in floor and roof framing.

Section 13.3

Glulam beams are made of layers of lumber glued together. A finger joint is a way of joining solid wood end to end. Finger-jointed lumber can be sawed and nailed like solid lumber. Laminated-strand lumber (LSL) is made from strands of wood glued together. Parallel-strand lumber (PSL) is made from ribbons of wood veneer glued together.

Review Content Vocabulary and Academic Vocabulary

1. Use each of these content vocabulary and academic vocabulary words in a sentence or diagram.

Content Vocabulary

- engineered panel (p. 338)
- plywood (p. 338)
- plies (p. 338)
- veneer match (p. 343)
- composite panel product (p. 347)
- oriented-strand board (OSB) (p. 349)
- medium-density fiberboard (MDF) (p. 350)
- engineered lumber (p. 352)
- laminated-veneer lumber (LVL) (p. 352)
- glulam (p. 360)
- camber (p. 361)
- finger joint (p. 363)

Academic Vocabulary

- assemble (p. 340)
- components (p. 352)
- temporary (p. 356)
- retain (p. 360)

Speak Like a Pro

Technical Terms

2. Work with a classmate to define the following terms used in the chapter: *panels* (p. 338), *adhesives* (p. 338), *face plies* (p. 339), *front face* (p. 339), *back face* (p. 339), *prescriptive* (p. 340), *performance-rated* (p. 342), *fiber-cement board* (p. 351), *billet* (p. 354), *parallel lamination* (p. 354), *flanges* (p. 355), *web stiffeners* (p. 357), *bearing blocks* (p. 357), *inches of camber* (p. 361), *radius of curvature* (p. 361), *framing grade glulams* (p. 361), *architectural grade glulams* (p. 362), *certified exterior joints* (p. 363), *certified glued joints* (p. 364), *laminated-strand lumber (LSL)* (p. 364), *parallel-strand lumber (PSL)* (p. 364).

Review Key Concepts

3. Discuss how the use of engineered lumber helps conserve wood resources.

4. Describe the grading system for plywood.

5. **Explain** how to store LVL I-joists.
6. **List** the differences between composite panel and plywood.
7. **List** two safety rules for machining engineered panels.

Critical Thinking

8. **Synthesize** Describe one advantage of the availability of I-joists at multiple lengths.
9. **Explain** How does laminated-veneer differ from plywood?

Academic and Workplace Applications

STEM Science

10. **Adhesives** A critical ingredient of a compound panel is the adhesive used to bond the wood pieces or particles. Most adhesives work by either chemically bonding materials or by mechanically bonding them together. Use your school library or the Internet to research these two types of bonds. Then write a one-page explanation of the difference between a chemical bond and a mechanical bond.

STEM Science

11. **Expansion and Contraction** When a floor is framed with conventional lumber, the ends of the floor joists are connected with solid lumber of the same size. This lumber is called a rim joist. Solid lumber rim joists do not work with flooring systems framed with I-joists. This is because the two products expand and shrink differently. Do you know why they expand and shrink differently? Find out more about expansion and contraction of wood products. Then write three to five sentences describing why various wood products expand and contract.

STEM Mathematics

12. **Estimate Sheathing** Engineered panel products are usually purchased in 4×8 panels, but are also available in 4×10 and 4×12 panels. A 4×8 panel covers 32 sq. ft. (4 × 8 = 32 sq. ft.) of space; a 4 × 10 panel covers 40 sq. ft. A 4×12 panel covers 48 sq. ft. Determine how many 4×8 panels of plywood are actually needed for the walls of a room that measures 10' × 12' and has 8' high ceilings.

Step 1: Calculate the perimeter of the rectangular room.

Step 2: Multiply the perimeter times the wall height to determine the area of the walls to be covered.

Step 3: Determine the square footage (area) of one panel of plywood.

Step 4: Divide the number of square feet to be covered by the area of one sheet of plywood to determine the actual number of sheets needed.

Standardized TEST Practice

CERTIFICATION PREP

Multiple Choice

Directions Choose the term or number that best answers the following questions.

13. Which can be used to fasten plywood to other materials?
    - **a.** ropes
    - **b.** staples
    - **c.** screws
    - **d.** stakes
14. What is the moisture content of laminated-veneer products after they are dried?
    - **a.** 20%
    - **b.** 8%
    - **c.** 15%
    - **d.** 35%
15. What can excessive exposure to sunlight cause the wood in a glulam beam to do?
    - **a.** break down
    - **b.** fade in color
    - **c.** shrink
    - **d.** expand

TEST-TAKING TIP

If you skip a question, make a mark next to it. Go back to the questions you skipped after you have reached the end of the test.

*These questions will help you practice for national certification assessment.