CHAPTER 27

Cabinets & Countertops

Chapter Objectives

After completing this chapter, you will be able to:

- **Identify** the five basic kitchen layouts.
- **Describe** the difference between frameless and face-frame cabinet construction.
- **Explain** the process for installing a base cabinet.
- **Explain** the process for installing a wall cabinet.
- **Demonstrate** how to install postformed countertop.
- **Apply** plastic laminate to a surface.

Discuss the Photo

Cabinetry Cabinets make a house more livable by providing storage space as well as support for work surfaces. *Which rooms in your home have cabinets? How are these cabinets used?*

Writing Activity: Summarize Information

Find out more about kitchen and bathroom cabinets. Arrange an interview with a local cabinet maker, carpenter, or residential remodeling specialist. Prepare a list of questions you will ask in the interview. Make notes during the interview. Summarize your findings in a one-page document.

Chapter 27 Reading Guide

Before You Read Preview

Cabinets make a house more livable by providing storage as well as support for work surfaces. They are available in a wide variety of styles and in several basic configurations. Choose a content vocabulary or academic vocabulary word that is new to you. When you find it in the text, write down the definition.

Content Vocabulary

- wall cabinets
- base cabinets
- universal design
- work triangle
- stock cabinets
- semi-custom cabinets
- custom cabinets
- carcase
- face-frame cabinet
- frameless cabinet
- substrate

Academic Vocabulary

You will find these words in your reading and on your tests. Use the academic vocabulary glossary to look up their definitions if necessary.

- design
- increments
- bond

Graphic Organizer

As you read, use a chart like the one shown to organize information about the five basic layouts commonly used in kitchen design.

Type of Layout	Description
U-Shape	
L-Shape	
Parallel Wall	
Side Wall	
Island	

Go to **glencoe.com** for this book's OLC for a downloadable version of this graphic organizer.

Academic Standards

Mathematics

Problem Solving: Solve problems that arise in mathematics and in other contexts (NCTM)

Number and Operations: Compute fluently and make reasonable estimates (NCTM)

English Language Arts

Conduct research and gather, evaluate, and synthesize data to communicate discoveries (NCTE 7)

Use written language to communicate effectively (NCTE 4)

Science

Science and Technology: Abilities of technological design (NSES)

Science as Inquiry: Abilities necessary to do scientific inquiry (NSES)

Industry Standards

Cabinets and Countertops

NCTE National Council of Teachers of English
NCTM National Council of Teachers of Mathematics
NSES National Science Education Standards

Section 27.1

Planning for Cabinets

Planning for Kitchens & Baths

What is universal design?

The kitchen of a house usually contains more cabinetry than any other room. However, cabinets (sometimes called *casework*) are found also in bathrooms, laundry rooms, and family or recreation rooms.

Cabinetry is installed just before interior trim, or sometimes at the same time. In the past, most cabinets were built on site by finish carpenters. This is rarely done today. Instead, cabinets such as those shown in **Figure 27-1** are either custom built in small cabinet shops or produced by regional or national manufacturers.

Because cabinets are an essential part of kitchens and baths, planning these rooms is largely a matter of planning and placing the cabinets in these rooms.

The Planning Process

The basic arrangement of cabinets in any room is shown on the building plans (see Chapter 2). However, these plans usually provide only the location of cabinets, appliances, and related plumbing. The choice of specific cabinets is made at a later date by the builder or the client. A professional kitchen or bathroom designer might review the plans at this stage and make recommendations. The designer usually develops computer-generated renderings showing exactly how the kitchen would look with a

Figure 27-1 Kitchen Cabinetry

Kitchen Planning The kitchen is the room that has the largest number of cabinets. This is part of the reason a kitchen is often the most expensive room to build in a house.

particular style or brand of cabinetry. Many home centers and cabinet suppliers can also do this. Cabinet planning software can also show the stock numbers of each cabinet on a floor plan. This improves ordering accuracy.

Once this phase of the planning is complete, the cabinets can be ordered. This should be done well before construction of the house is complete. Depending on the style and complexity of the cabinetry and how busy the manufacturer is, it can take as little as six weeks or as long as six months to receive cabinets once they have been ordered.

Planning Kitchens

Kitchen **design** concepts have changed a great deal over the years. At one time, kitchens were actually in small buildings separate from the main house. At other times, the kitchen area was arranged around a central chimney, which served both for cooking and as a heat source. Today's kitchen is often combined with the family room to create a center for everyday living or informal entertaining. Kitchens are more beautiful, functional, and efficient than ever before.

Kitchens generally feature two basic cabinet types. **Wall cabinets**, also called *upper cabinets,* hang on a wall. **Base cabinets**, often called *lower cabinets,* rest on the floor and support the countertops.

Universal Design For many years, the design of kitchens was based on the assumption that the kitchens would only be used by able-bodied adults. Cabinet heights and layouts were designed accordingly. However, kitchens are used by individuals of many different needs and abilities. Increasingly, kitchen designers are using the concept of universal design as the foundation for kitchen design. **Universal design** is design that aims at making a house usable and safe for the widest variety of people, including elderly adults, children, teens, and individuals with disabilities. Research indicates that by the year 2020, more than 20 percent of the population in the United States will be 65 years of age or older. A properly designed kitchen, such as the one in **Figure 27-2**, increases the ability of older adults to live independently. One characteristic of a universal design kitchen is that it features countertops set at various heights.

Figure 27-2 Universal Design in a Kitchen
Design for All Universal design makes living spaces suited to people of varying physical abilities. *What kitchen features might be good for a person who uses a wheelchair?*

Kitchen Layouts

Five basic layouts are commonly used in kitchen design, as shown in **Figure 27-3** on page 782 (*REF* stands for refrigerator).

U Shape The U-shaped kitchen, with the sink at the bottom of the U and the range and refrigerator on opposite sides, is very efficient.

L Shape The L-shaped kitchen locates the sink and range on one leg of the L and the refrigerator on the other. Sometimes the dining space is located in the corner opposite the L.

Parallel Wall The parallel-wall kitchen is often found where there is limited space. The parallel-wall kitchen is sometimes called a *two-wall galley kitchen.* This type of

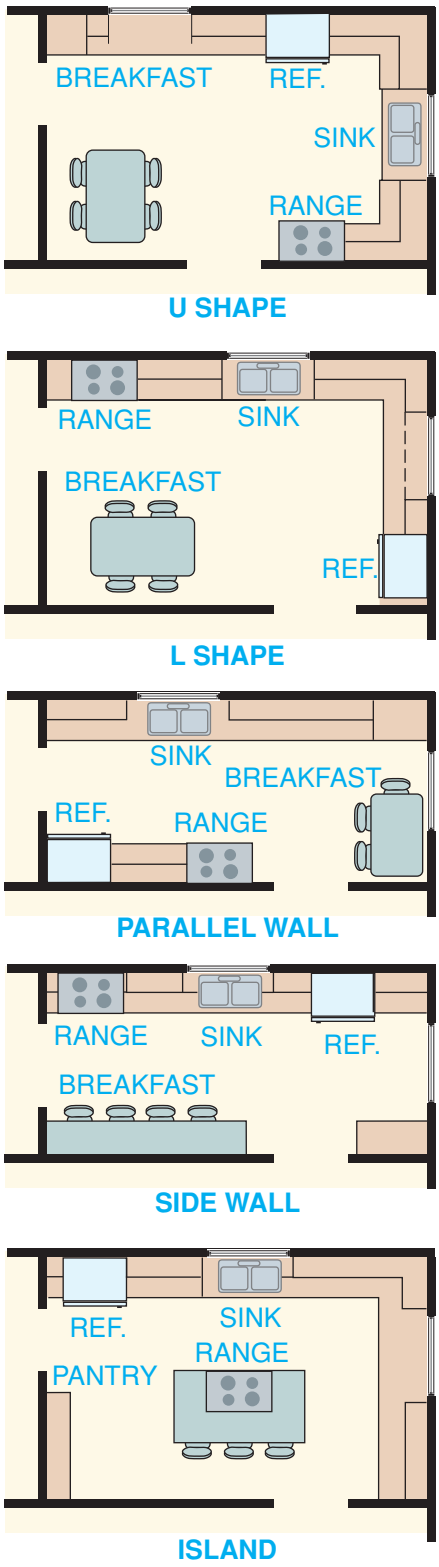

Figure 27-3 Common Kitchen Layouts
Most Popular These plans show the most popular kitchen layouts used in residential construction.

kitchen can be quite efficient with the proper arrangement of sink, range, and refrigerator.

Side Wall The side-wall kitchen is also called a *galley kitchen.* It is usually found in small apartments. The cabinets, sink, range, and refrigerator are all located on one wall. This type of kitchen usually has limited counter space.

Island The island kitchen features a cabinet "island" that is separate from the main cabinetry in the rest of the room. A range is usually placed in the island, along with storage for pans. This layout sometimes makes it difficult to provide a ventilating fan for the range. To solve this problem, some ranges have built-in downdraft fans that exhaust air outdoors through ducts in the floor.

Reading Check

Synthesize *Which type of kitchen layout would you recommend for a small apartment?*

Work Centers

Designers try to arrange a kitchen in a way that allows a meal to be prepared efficiently. One planning principle that leads to an efficient kitchen is called the *work triangle.* A **work triangle** represents the shortest walking distance between the refrigerator, the primary cooking surface, and the sink, as shown in **Figure 27-4**. The three sides of the triangle should add up to no more than 26'. A triangle with 15' to 22' is desirable, with 12' being the absolute minimum. No leg of the triangle should be shorter than 4' or longer than 9'.

Each point of the work triangle is associated with related cabinetry and countertop space that forms a work center, such as those shown in **Figure 27-5**. All equipment, storage space, and surface work areas for each activity should be located in the respective work centers. These work centers are:

Food Storage Center This is located around the refrigerator and specialized storage cabinets such as a pantry.

Cooking Center This is located around the primary cooking surface.

Cleanup Preparation Center Ideally, the cleanup/prep center (sink and dishwasher, — D.W. in Figure 27-4) should be located between the food storage center and the cooking center.

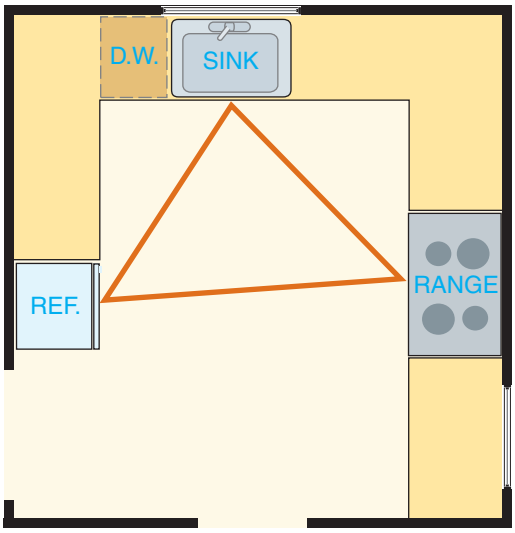

Figure 27-4 The Work Triangle

Efficient Arrangement In a work triangle, the sink or a major appliance is the focal point of each work center. The three sides of the triangle should add up to no more than 26'.

Kitchen Cabinet Dimensions

Ample storage in a kitchen is a necessity. Though the amount of cabinet space often relates to the size of the home, some basic guidelines are available. Even a small kitchen should have at least 158" of base cabinet frontage and 144" of wall cabinet frontage. This will ensure a sufficient amount of storage capacity.

It is essential to place the cabinets, countertops, and shelves at heights designed for efficiency, convenience, and comfort. Base and wall cabinets are usually installed at standard heights and depths, as shown in **Figure 27-6** on page 784. Clearances for wall cabinets over appliances and work centers must also be considered in the planning process.

Wall cabinets vary in height. Depending on the type of installation, they may be from 12" to 42" high. Wall cabinets are usually 12" deep and are often located beneath a soffit. A *soffit* is an area around the perimeter of a room that is lower than the rest of the ceiling. Kitchen soffits

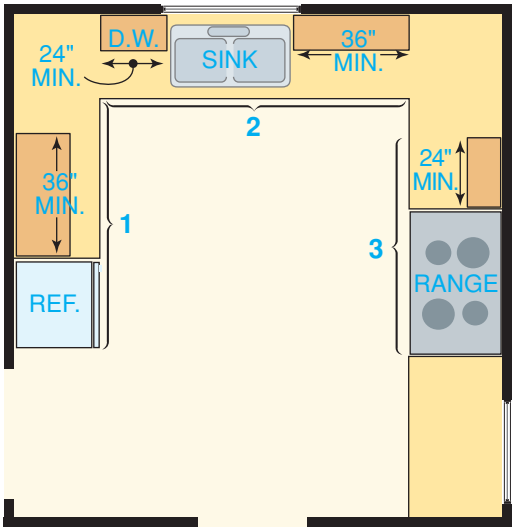

A

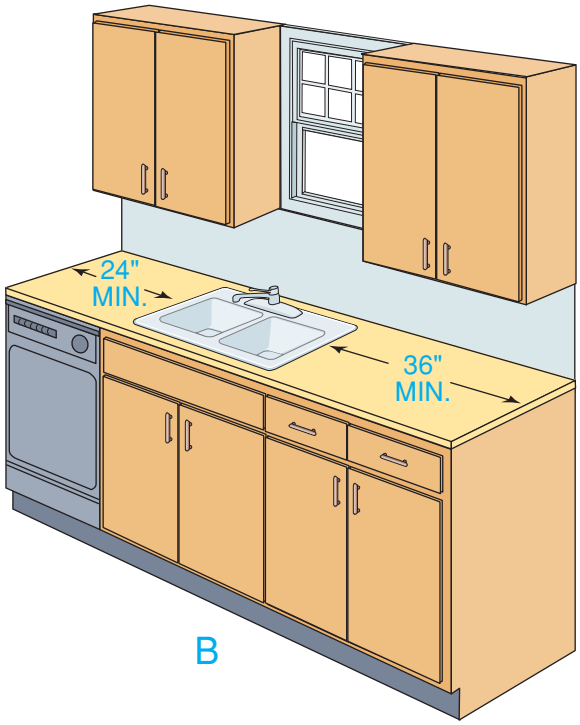

B

Figure 27-5 Work Centers

Minimums **A.** The three basic work centers: 1. Food storage. 2. Cleanup/preparation. 3. Cooking. The minimum counter space needed for each area is shown. **B.** A rendering of the cleanup/prep center is shown.

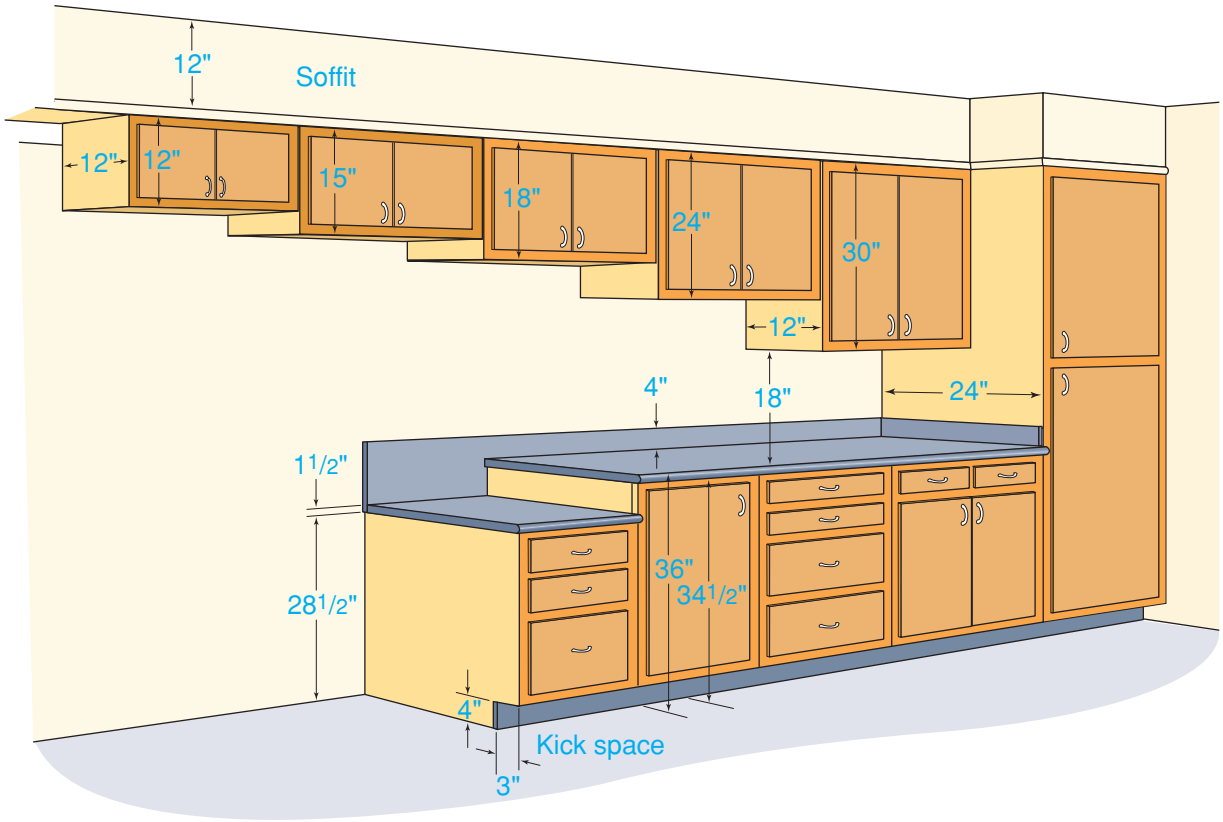

Figure 27-6 Standard Dimensions
Cabinet Possibilities Basic dimensions for standard cabinets. Upper cabinets can come in a wide variety of heights.

are usually 12" below the rest of the ceiling. They may be 14" to 28" deep. Base cabinets are typically 34½" high, not including the countertop. They are usually 24" deep. Custom-built cabinets may have other dimensions.

When planning cabinetry, the designer typically consults manufacturer's catalogs to determine the dimensions they have available. The catalogs provide stock numbers that are often based on the cabinet's dimensions, as shown in **Figure 27-7**.

When ordering cabinets, be sure to use the correct product number listed with each illustration in the catalog. Most product numbers refer to the size and type of cabinet. The first letters indicate the cabinet type. For example, W would mean a wall cabinet. The first two numbers indicate the width in inches. The second pair of numbers, if any, indicates the cabinet height. For example, in Figure 27-7, the designation W-3012 would indicate a wall cabinet (W) that is 30" wide and 12" tall.

For single-door base cabinets, always indicate whether the door is to be hinged on the right or the left side. Provide the manufacturer with the size of any sink and the openings needed for built-ins such as an oven, dishwasher, and refrigerator. This information can be obtained directly from the plumbing and appliance suppliers. Finally, be sure to include the style of the cabinet, the finish desired, and any accessories.

The cabinet catalog codes are important because they help to identify the huge variety of cabinet configurations that are possible. They also make it easy to identify cabinets on a floor plan. When the design is complete, a floor plan of the room will be developed and will include these stock numbers, as shown in **Figure 27-8**. The plan will also determine the exact location of upper and lower cabinets. Drawings showing cabinet details are often done at a scale

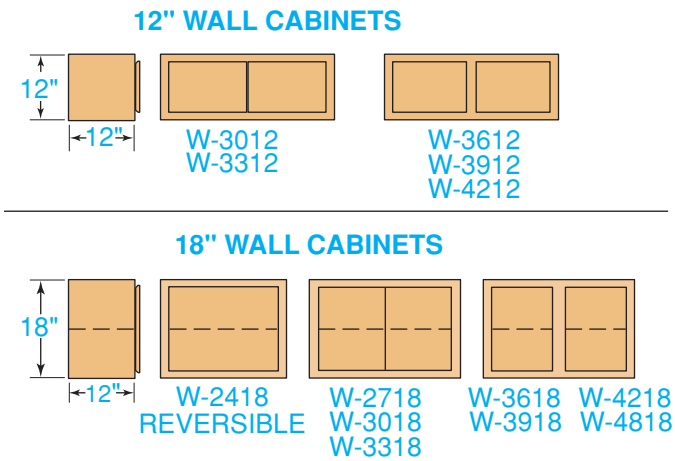

Figure 27-7 Catalog Codes
Identification System A manufacturer's catalog shows kitchen cabinet stock numbers in a way that indicates their dimensions.

of ½" = 1'-0". They may also show special features of the kitchen, such as a valance over the kitchen window.

The standard method for showing wall and base cabinets on the same floor plan drawing is shown in Figure 27-8. For example, look at the left side of the floor plan. Cabinet W3618 is a wall cabinet that is above cabinet SFRF36, a base cabinet. The base cabinet goes all the way to the wall.

Planning Bathrooms

Bathroom cabinets are sometimes referred to as *vanity cabinets.* Much less flexibility exists for placing cabinetry in bathrooms. This is because the location of plumbing, drains, vents, and a tub or shower determines the cabinet layout. Also, bathrooms are much smaller than kitchens, and the need for storage is much less. Though large bathrooms may include upper cabinets, most feature only lower cabinets.

Bathroom Cabinet Dimensions Bathroom cabinets are planned and chosen in the same fashion as kitchen cabinets. The main difference between kitchen cabinets and bathroom cabinets is that bathroom cabinets tend to be smaller in size. Also, wall cabinets are not as common in bathrooms. Base cabinets are usually 30" high and 21" deep.

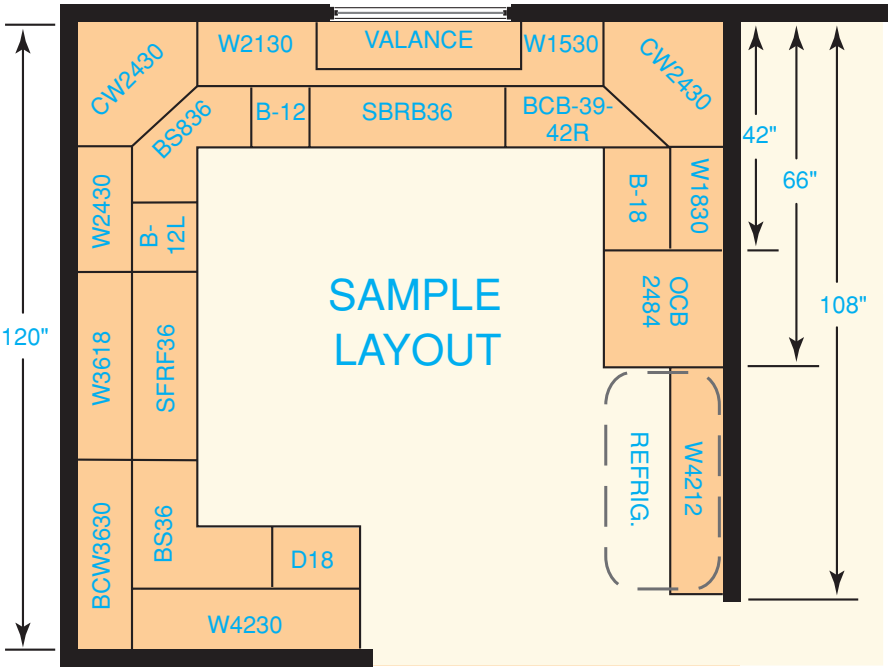

Figure 27-8 Cabinet Floor Plan
Identity and Location The cabinets for this kitchen layout are identified by the manufacturer's stock numbers.

When planning bathroom cabinets, it is important to note which cabinet will be the one that supports the sink. This is because the sink and the drain pipes beneath it take up a considerable amount of space in bathroom cabinets. Special cabinets for the location under the sink are typically fitted with false drawer fronts, as shown in **Figure 27-9**. This conceals the fact that there is no room under the sink for a drawer to slide into the cabinet. The drawer front is secured permanently in place.

Estimating and Planning

Cabinetry

CERTIFICATION PREP

This estimating and planning exercise will prepare you for national competitive events with organizations such as SkillsUSA and the Home Builder's Institute.

Materials

Approximate costs for wall and base cabinetry can be obtained from lineal-foot measurements taken from the plans. These represent the length of the cabinetry as measured at its front edge. However, these figures are used only for general planning purposes. A more accurate estimate must be made when the style and grade of cabinetry have been selected.

The precise costs for manufactured cabinets can be found on the manufacturer's current price lists. If higher-grade hardware will be used, make sure to include the additional cost. Site-built cabinets require a complete bill of materials with prices for each individual item, including hardware, glass, shelves, and any special trim.

Labor

The time required to install manufactured cabinets varies with the room layout and the cabinet type. An approximate labor cost can be determined by adding the times needed for installation and multiplying the total by the local hourly rate. The approximate times for installing various cabinets are listed in the table in the next column.

On remodeling jobs, be sure to include the cost of removing and disposing of the old cabinets. Sometimes the old cabinets can be reused in some other part of the house.

Approximate Installation Times for Factory-Built Cabinets

Type of Cabinet	Time (hours)
Base cabinet containing one door and one drawer	½
Base cabinet containing two doors and two drawers	¾
Base corner cabinet	1
Broom closet	1
Drawer cabinet with four drawers	½
Oven cabinet	1¼
Sink cabinet	1½
Wall cabinet with two doors (refrigerator cabinet)	½
Wall cabinet with two doors (standard height)	½
China case corner unit with 36" front	2
Bathroom vanity up to 84" long	2

Estimating on the Job

Refer to the L-shaped kitchen layout shown in Figure 27-2 on page 781. If the kitchen is 18' long and 12' wide, how many square feet of plastic laminate would be needed to cover the countertop excluding edges? Assume that the countertop is 2' wide.

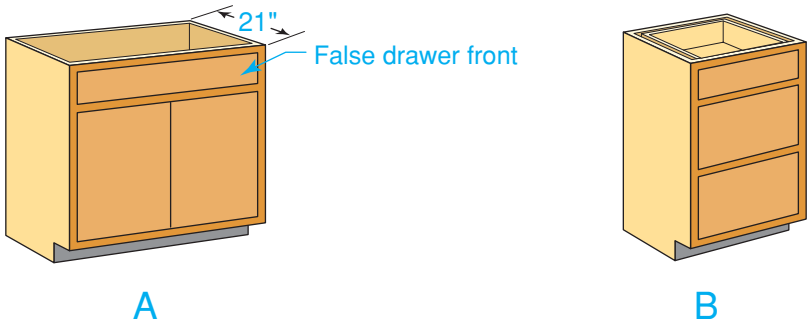

Figure 27-9 Vanity Cabinet
Room for a Sink A. This base cabinet has an open top for placement of a sink. Compare this to the base cabinet shown in **B**, which has drawers.

Section 27.1 Assessment

After You Read: Self-Check

1. What information about cabinetry can be found on the building plans?
2. What is universal design?
3. Name the five basic kitchen layouts.
4. Why is there less flexibility for placing cabinetry in bathrooms?

Academic Integration: Mathematics

5. **Calculate Cabinet Size** An important part of a carpenter's job is being able to accurately calculate actual size from the scale of a floor plan. Assume two equal-sized cabinets are put together to make an island in a kitchen. If the scale used on the plans is ½ in. = 12 in., what are the actual dimensions of the island if a cabinet is shown as 1½ in. wide and 2 in. long on the floor plan?

Math Concept To calculate actual width or length from scale dimensions, set up and solve a proportion. A proportion is an equation that sets two ratios equal to each other.

Step 1: Let w equal the actual width of a cabinet. Think, "½ is to 12 as 1½ is to w."
Step 2: Multiply each element of the proportion by 2 to eliminate fractions.
Step 3: Solve for w, the actual width, using cross multiplication.
Step 4: Repeat the procedure to find l, the actual length of a cabinet.
Step 5: Calculate the dimensions of two cabinets placed side-by-side.

Go to **glencoe.com** for this book's OLC to check your answers.

Section 27.2

Choosing & Installing Cabinets

Anatomy of a Cabinet

What techniques might be useful for making curved cabinets?

Manufactured cabinets may be stock cabinets, semi-custom cabinets, or custom cabinets. However, these are only approximate terms, because there are many overlaps between the categories. In general, the terms indicate how much input a client has in the final size and design of the cabinet.

- **Stock cabinets** are built in standard sizes and stored in a warehouse until ordered. They are the least expensive type of cabinet. The buyer has a modest number of choices regarding finishes and styles. Stock cabinets are available in width **increments** of 3". Where these increments do not quite fit the actual dimensions of a room, small wood pieces called *filler strips* are installed to make up the difference. Because they are built ahead of time, stock cabinets can be obtained fairly quickly.
- **Semi-custom cabinets** are built only after they are ordered for a specific kitchen. A buyer has more choices about style, finish, and hardware. The buyer also may work with a designer instead of picking cabinets from a catalog. Semi-custom cabinets are generally available only in width increments of 3".
- **Custom cabinets** can be built in any width or height to fit a kitchen exactly. Almost any size, style, finish, or hardware is possible. In this respect, manufactured custom cabinets are much like those made by local cabinetmakers. They are usually the most expensive type of manufactured cabinets and usually take the longest to arrive.

Cabinet Types

The **carcase** is an assembly of panels that forms a cabinet's basic shape. It is often made of plywood. It may also be made of particleboard or medium-density fiberboard (MDF) covered with wood veneer or plastic laminate. The carcase is assembled with nails, staples, glue, or a combination of these. It is sometimes reinforced with wood corner blocks or stretchers.

The two basic types of cabinet construction are *face-frame* (traditional) and *frameless* (often called *European-style*). Both types can be built from a variety of materials, using various types of joinery. Both types can be built in a factory as stock, semi-custom, or custom cabinets.

A variation of frameless cabinet construction is sometimes called the *32-mm system*. The number refers to a modular dimension used to locate the position of various cabinet features, including hinges. All cabinets based on the 32-mm system are frameless, but not all frameless cabinets use the 32-mm module. The advantage of this system is that it reduces the number of different dimensions needed when building cabinets.

Face-Frame Cabinets The face-frame cabinet is the traditional type of cabinet used in the United States. In the **face-frame cabinet**, the face frame fits around the front of the carcase and provides a mounting surface for hinges and drawer hardware, as shown in **Figure 27-10**. A face frame is usually made of ¾" thick hardwood. The joints of a face frame may be reinforced with dowels, biscuits, or screws. The cabinet rests directly on the subfloor. A hanger rail at the back is used to secure the cabinet to the wall. Base cabinets typically have one hanger rail. Wall cabinets have two hanger rails: one at the top of the carcase and one near the bottom.

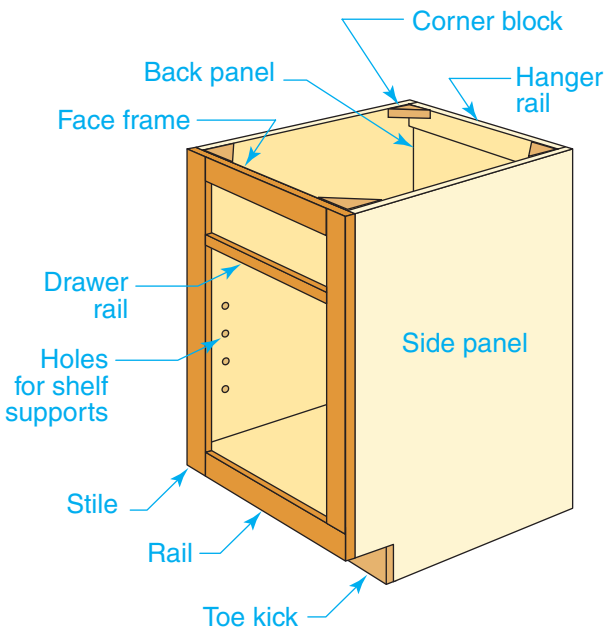

Figure 27-10 Face-Frame Cabinet
Traditional Parts of a typical face-frame cabinet.

Frameless Cabinets A **frameless cabinet** does not have a wood frame around the opening, as shown in **Figure 27-11**. Hinges are concealed and mounted on the side walls. This requires a special type of hinge called a *cup hinge* (see page 792). Frameless cabinets do not rest directly on the subfloor. Instead, they are supported either on leveling feet or on a wood base frame. The base frame is often made of ¾" plywood. This is a good way to use narrow scraps that are often left after larger pieces are cut from a plywood sheet.

Cabinet Drawers

The drawers of any type of cabinet can be assembled from plywood, particleboard, MDF, or from a hardwood such as beech. The bottom panel of a drawer fits into a groove cut into the drawer sides, front, and back. The material and the methods used to assemble a drawer have a great impact on its strength and durability.

The drawer front is usually a different type of wood than the body of the drawer. Joinery details for drawers are shown in **Figure 27-12** on page 790. All of the methods shown are variations of a three-sided drawer box. In this method, the drawer box (back and two sides) is attached directly to the drawer front. In four-sided drawer box

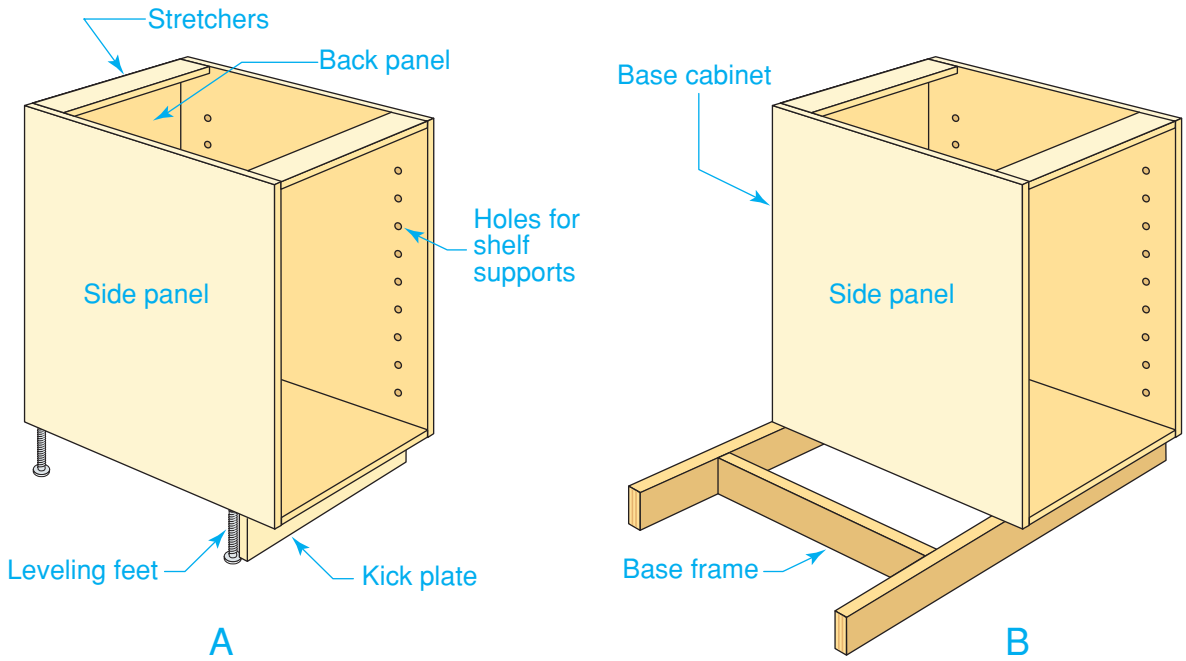

Figure 27-11 Frameless Cabinet
European-Style The base unit of a frameless cabinet rests on leveling feet (A) or on a wood frame (B).

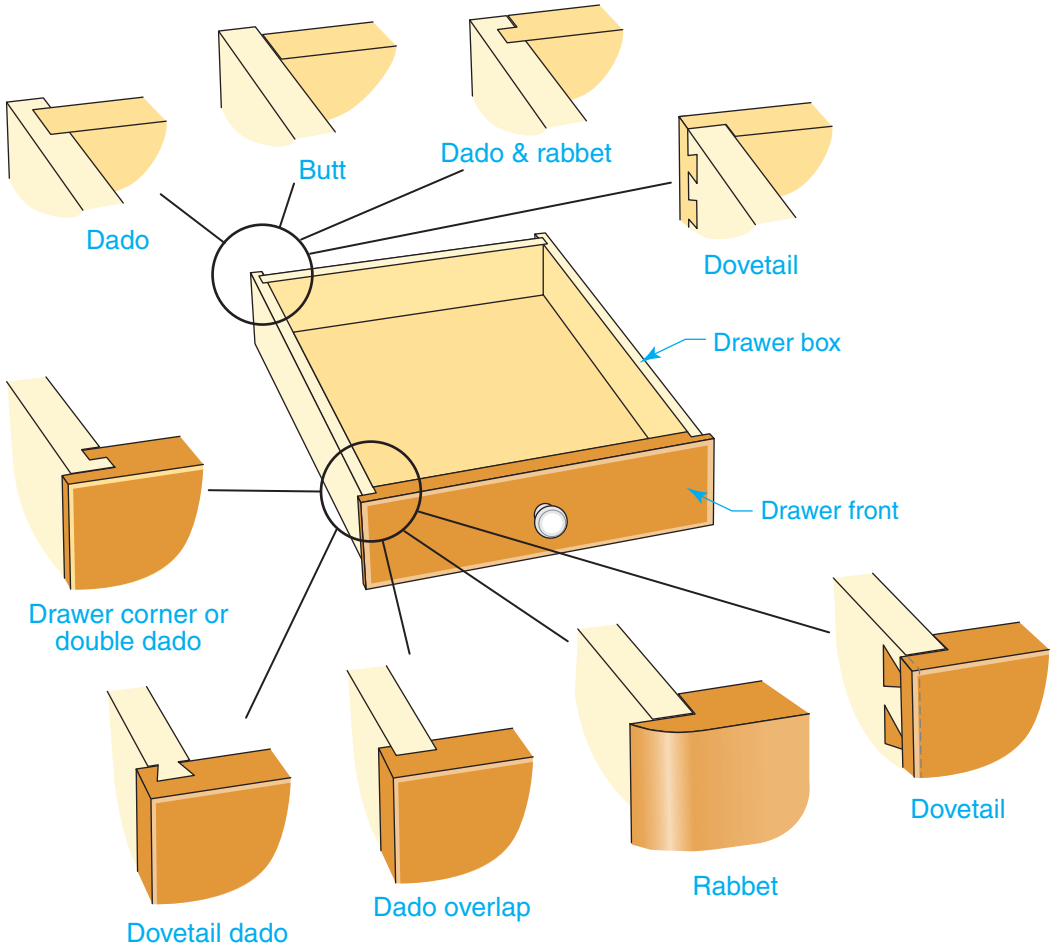

Figure 27-12 Drawer Joinery
Many Options Common types of joinery used in three-sided drawer construction.

construction, the drawer box has four sides (back, sub-front, two sides). The drawer front is attached to the sub-front with screws driven from inside the drawer. The disadvantage of four-sided construction is that it uses more materials. The advantage is that the drawer front can easily be adjusted to fit the cabinet.

Cabinet Doors

Doors are the most visible part of a cabinet. They can be made of solid wood, plywood, MDF, or particleboard. The type, style, and finish of the doors affect the cabinet's appearance. There are two basic types of doors:

Inset Doors *Inset doors*, also called *flush doors*, fit entirely within the door opening, as shown in **Figure 27-13**. A small gap is required between the door and the face frame to provide clearance. Inset doors

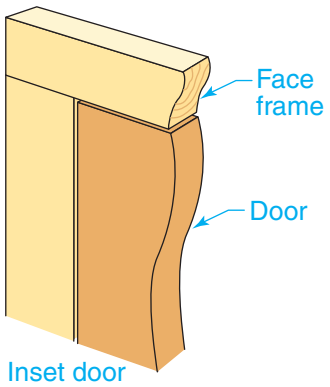

Figure 27-13 Inset Door
Close Tolerances An inset door fits entirely within the opening formed by the face frame. The front surfaces are flush.

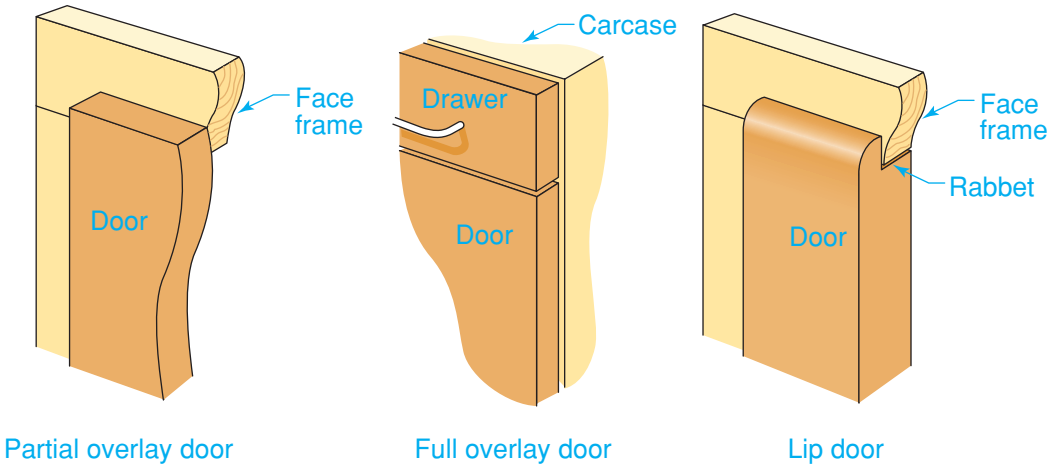

Figure 27-14 Overlay Doors
Easy to Fit The various types of overlay doors overlap the face frame or the carcase.

require tight tolerances and thus are more time-consuming to install.

Overlay Doors *Overlay doors* fit over the edge of the carcase of a frameless cabinet. If the cabinet is a face-frame design, the doors fit over the face frame. Overlay doors may be constructed in several ways, as shown in **Figure 27-14**.

Door Panels Doors may have flat or raised panels, as shown in **Figure 27-15**. Both types can be used as inset doors or overlay doors. Both can be used on face-frame or frameless cabinets. Raised-panel doors have a more traditional look, but the added labor and material increase the price. Flat-panel doors are economical and easy to keep clean.

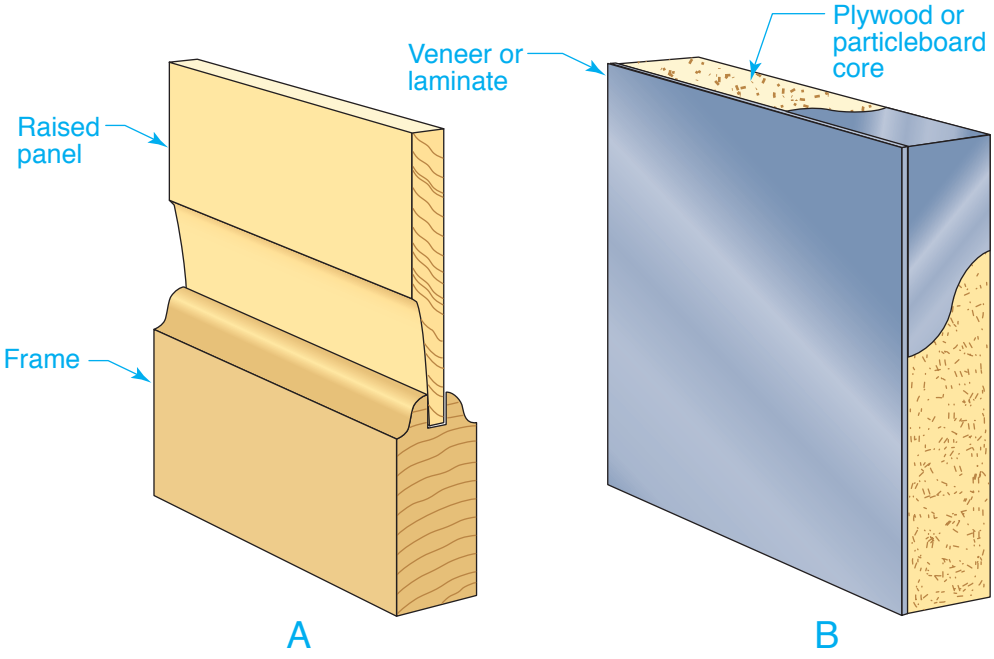

Figure 27-15 Door Panels
Two Options Details of panel door construction. **A.** A raised-panel door is built from solid wood. The panel is held in place by the frame. **B.** A flat-panel door is often covered on all sides and edges with plastic laminate.

Cabinet Hardware

Why must cup hinges be so adjustable?

To perform well over a long period of time, any cabinet must be fitted with quality hardware. Good door hinges and drawer guides are particularly important, but quality and cost vary widely. Some manufacturers offer several different grades of hardware for use with their cabinets. Others offer only one grade of hardware with each grade of cabinet. Makers of custom-built cabinets offer unlimited hardware choices. Most cabinets may be made more useful with the addition of accessories. These include spice racks, drawer organizers, and slide-out storage trays.

Drawer Guides

Drawers may be mounted on one or two guides, which are sometimes called *slides*. A single, center-mounted guide can be located beneath the drawer along its centerline, as shown in **Figure 27-16**. It can be used only on cabinetry that has a face frame because the front of the guide needs support. It is generally attached to the inner surface of the face frame. To keep the drawer from tipping to either side, small rollers or plastic guides can be attached to the face frame on the sides of the drawer opening. In manufactured cabinetry the center guide is usually made of metal.

Side-mounted guides are stronger than center guides because they support both sides of the drawer, as shown in **Figure 27-17**. They can be used on either face-frame or frameless cabinets. Full-extension guides are the most useful because they allow the drawer to be pulled all the way out for full access to the back. However, three-quarter extension slides are more common. The sliding mechanism may feature nylon wheels or ball bearings.

Reading Check

Summarize *Why are full-extension drawer guides considered to be the most useful?*

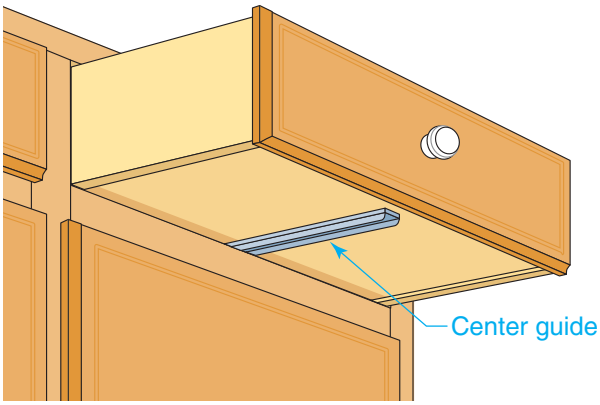

Figure 27-16 Center-Mounted Drawer Guide
Inexpensive A center-mounted drawer guide requires support by a face frame.

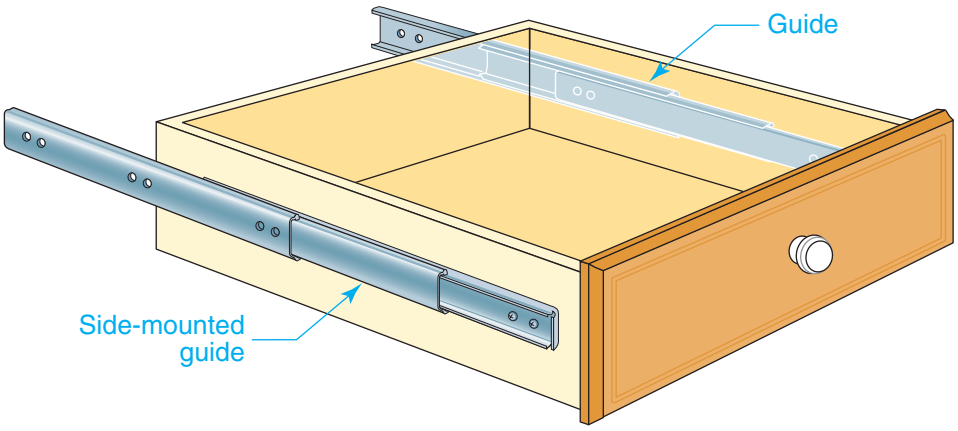

Figure 27-17 Side-Mounted Drawer Guides
Heavy-Duty Side-mounted guides are the best choice when drawers will be heavily loaded. This makes them well suited for kitchens.

Door Hinges

Door hinges come in a variety of styles and designs. The three basic types are *barrel hinges, knife hinges,* and *cup hinges.*

Barrel hinges are a very common type of hinge used on cabinetry in the United States. The hinge consists of two plates connected with a pin, as shown in **Figure 27-18**. One plate is screwed to the face frame and the other is screwed to the cabinet door. Some plates are L shaped and wrap around the edge of the face frame. Only the barrel of the hinge is visible on the outside of the cabinet.

Figure 27-18 Barrel Hinge
Common Style The large plate of this barrel hinge wraps around the cabinet face frame.

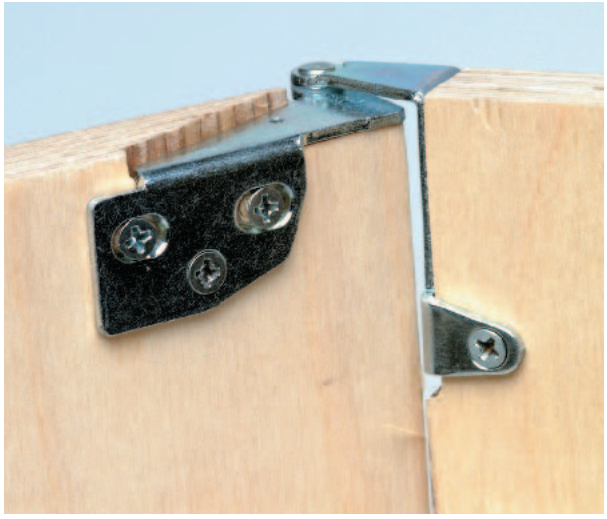

Figure 27-19 Knife Hinge
Door Closer A knife hinge is unobtrusive and holds a door in place against the face frame.

Knife hinges feature two plates connected with a simple spring mechanism. When the cabinet door is closed, the knife hinge holds the door against the face frame without needing a separate latch. One plate is screwed to the face frame, while the other is screwed into a small slot cut into the door, as shown in **Figure 27-19**.

Cup hinges, which are sometimes called *concealed hinges* or *European-style hinges,* were devised for use on frameless cabinetry. They have a mounting flange and a metal cup connected by a pivoting mechanism, as shown in **Figure 27-20**. The cup is inserted into a 35-mm diameter hole bored into the door. The mounting flange is screwed to the inside wall of the cabinet. There is no need for a face frame. Cup hinges have several advantages. They can be adjusted in several planes (up/down, side-to-side, in/out) simply by turning one or more screws on the hinge. In addition, they are quite strong and can be installed quickly. A cup hinge is not visible on the outside of the cabinet.

In the United States, the most common cabinet is one built with a face frame, partial overlay doors, and barrel hinges. In European homes, the most common cabinet is a frameless model with full overlay doors supported on cup-type hinges.

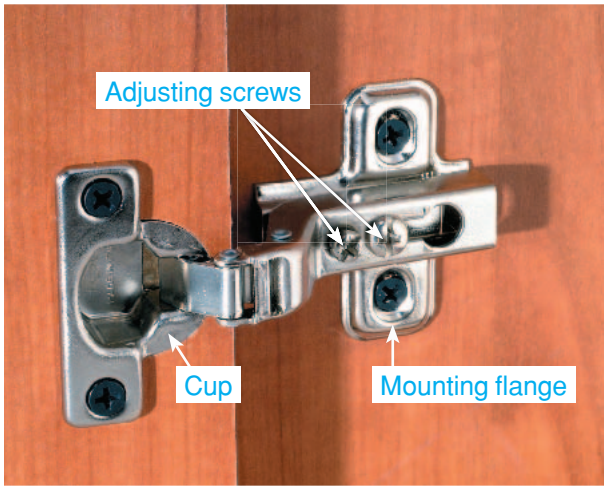

Figure 27-20 Cup Hinge
Hidden Hinge Some models have a plastic cap that covers the hinge-adjusting screws.

Arnold & Brown

Knobs and Pulls

Knobs and pulls for drawers and doors are sometimes installed by the cabinet manufacturer. However, this hardware is more commonly added after the cabinets are installed. This allows the client to have the greatest choice of style, color, and material.

The principles of universal design also apply to cabinet hardware. Many people find it difficult to grasp small round knobs when opening drawers and cabinet doors. Pulls are generally easier to use.

Knobs and pulls are held in place by one or two bolts inserted through the back of the drawer front or door. The installer must carefully measure the location of mounting holes. The holes for pulls may be 3", 3½", or 4" OC.

Installing Cabinets

What are recessed cabinets?

Factory-built cabinets may be installed in one of two ways. Some cabinetmakers prefer to install the base cabinets first and then the wall cabinets. Others prefer to install the wall cabinets first. This is sometimes more convenient because it allows the installer to stand close to the wall while working, rather than having to reach over or climb onto the base cabinets. With either approach, the end result must be cabinets that are plumb and level. The following methods describe how to install face frame cabinets and also apply to frameless cabinets.

Installing Base Cabinets

After the cabinets have been delivered, unpack them and check their dimensions against the plans and the original order. Store the cabinets near the room where they will be installed. Then begin the layout.

1. Use a straightedge and a laser level or standard level to locate the highest part of the floor in the area where the cabinets will be placed. This will be the starting point for the layout.
2. Measure up the wall from this high point a distance equal to the height of the base cabinet, as shown in **Figure 27-21**. This is usually 34½" from the floor (assuming a 1½" thick countertop). Draw a mark.
3. Use a standard level or laser level to locate additional layout marks at the same elevation around the perimeter of the installation. Connect the layout marks with a pencil line or chalk line.
4. Locate the position of studs in the area. Mark their centerlines.
5. Cabinet installation generally begins with a corner cabinet, if there is one. However, the installer may decide to begin with other cabinets depending on the layout of the room. In either case, align the top back edge of the first cabinet with the layout line. Use wood shims as necessary until the cabinet is plumb and level, as shown in **Figure 27-22**. If the floor and/or wall is uneven, the base of the cabinet may have to be scribed and material removed. For more on scribing, see page 767 in

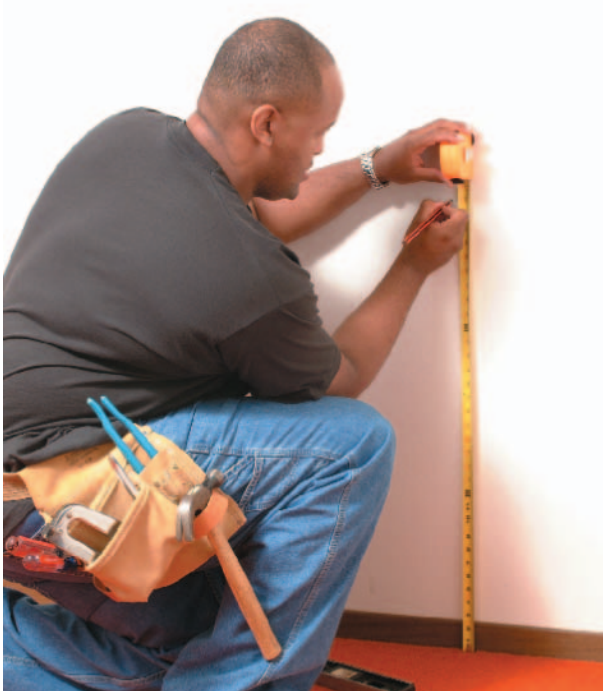

Figure 27-21 Cabinet Layout
Mark the Height Measure upward from the high point of the floor and draw a layout mark.

Chapter 26 ("Scribing a Joint"). Set the compass to the amount needed to lower the cabinet to the layout line.

6. Screw the cabinet to the studs with 2½" or 3" wood screws. Run them through the mounting rail at the back of the cabinet. If studs cannot be reached, use hollow-wall anchors instead. Be sure to avoid any electrical wires or plumbing pipes in the wall.
7. Install the adjacent cabinets in the same way. As you install each cabinet, clamp it to the previous cabinet and fasten the two together permanently, as shown in **Figure 27-23**. Some carpenters run two screws through the edge of one face frame into the face frame next to it. They drill and countersink pilot holes first. Then they install slender trim-head screws that are just long enough to penetrate ¾" into the face frame. Other carpenters prefer to bolt the cases together. The bolt heads and nuts should be countersunk.

JOB SAFETY

CHECK LOCAL CODES When installing cabinets in areas where earthquakes are common, check local codes regarding the type and size of fastener used to secure wall cabinets.

Go to **glencoe.com** for this book's OLC for more on job safety.

8. Where a run of cabinets must fit between walls, it is often necessary to insert a filler strip at one or both ends of the run. The filler strip will close up any gap between the cabinet and the wall. It must have the same color and finish as the cabinets. Scribe the filler strip to fit the gap. To secure the strip, screw it to the side of the last cabinet to be installed.

Frameless cabinets are often mounted on a separate continuous base. This eliminates joints in the base area and provides a stable

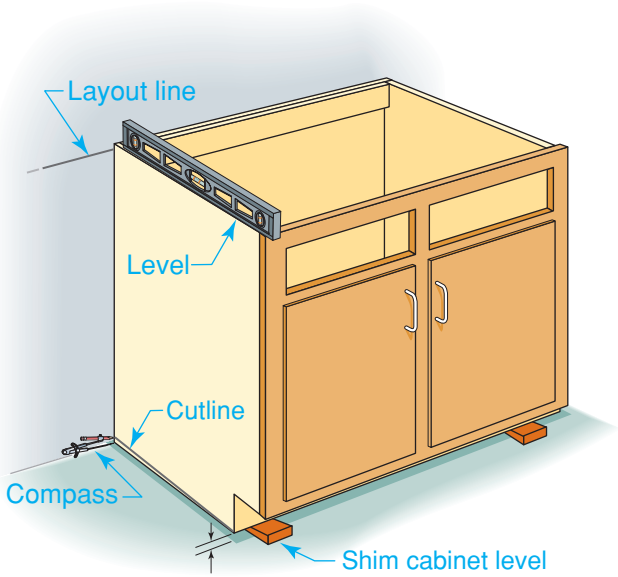

Figure 27-22 Leveling the Cabinet
Shim or Scribe As necessary, add shims to make the cabinet level. If the floor is uneven, scribe the base as shown and cut along the scribed line using a jigsaw or circular saw.

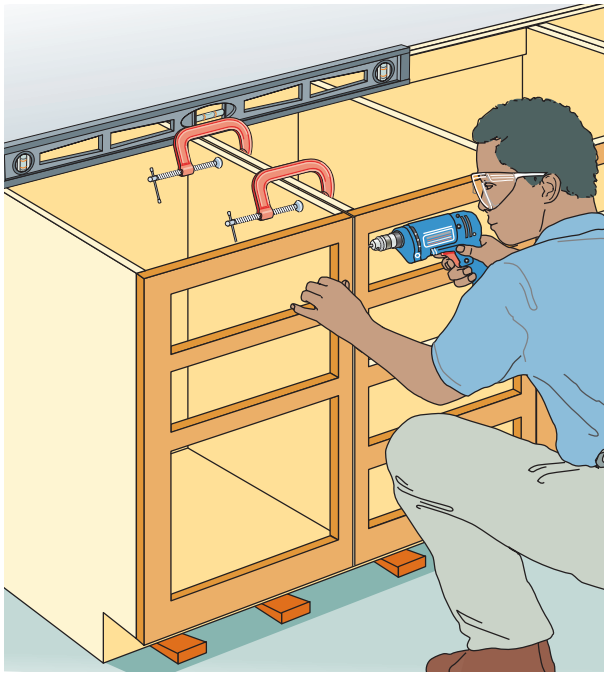

Figure 27-23 Connecting Cabinets
Level, Then Fasten Fasten the cabinets together with bolts or wood screws.

platform for the cabinets. The base must be leveled and secured to the floor before the cabinets are installed.

In North America, cabinets are permanently attached to the walls. In Europe, however, cabinets are often considered to be more like furniture. When a house is sold, the owner may remove the cabinetry and reinstall it in the new house.

Installing Wall Cabinets

A wall cabinet must be mounted securely so that it can bear heavy loads. It is attached to the wall with wood screws. Use at least #10 roundhead screws that are long enough to go through the ¾" back rail and the wall covering and extend at least 1" into the studs. A minimum of four screws should be used for each cabinet. Never rely on nails for hanging wall cabinets or on screws driven only into the wall covering. They will not hold securely. Also, do not use drywall screws, because the weight of the cabinet can cause them to shear off. Install wall cabinets as follows:

1. Measure up from the base cabinets (or down from the soffit) and draw a mark representing the bottom of the wall cabinet. Extend the layout line around the area where the wall cabinets will be installed. The most common distance between the countertop and the bottom of an upper cabinet is 18". Cabinets over a range require more clearance. Check local codes. Always refer to manufacturer's instructions when installing range hoods. Be sure to account for the thickness of the countertop when measuring from base cabinets.
2. Locate the positions of the studs and mark their centerlines.
3. Determine where the cabinet mounting rails will cross over the centerlines of the studs. Drill through the rails at these points using a drill bit that matches the shank diameter of the mounting screw. The screw should slip through this hole with little resistance.

Builder's Tip

SUPPORTING CABINETS Commercial cabinet jacks can be used to support upper cabinets during installation. You can also make a sturdy support stand from plywood or framing lumber. Size the stand to rest on the base cabinets and support the wall cabinets at a standard height.

4. Place a cabinet in position and brace it securely. Make certain the cabinet is tight against the wall and the soffit. If there is no soffit, be sure the tops of the cabinets are level and aligned.
5. Drill pilot holes through the existing mounting rail holes and into the studs, as shown in **Figure 27-24**. Use at least two screws in the upper rail and two in

Figure 27-24 Drilling Pilot Holes
Teamwork One person should support the cabinet as another person drills the pilot holes and installs fasteners.

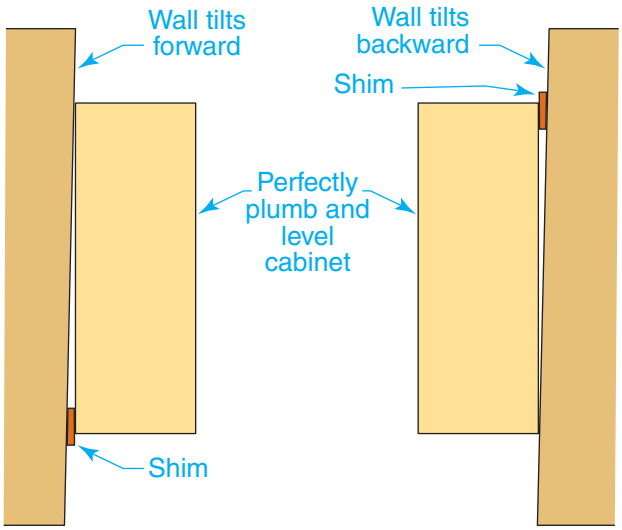

Figure 27-25 Shimming Wall Cabinets
Uneven Walls Scribe the cabinet to the wall, or place wood shims behind it to ensure that it remains plumb and level.

the lower rail. If it is impossible to screw directly into studs, some carpenters install wood blocking in the wall. If the cabinet spans only one stud, use wood screws to fasten it to the stud and 3/16" by 3½" toggle bolts to hold it against the wall surface.

6. Uneven walls sometimes make it difficult to obtain proper alignment and get a snug fit. If enough material is available on the back of the cabinet, the cabinet should be held in place, scribed, and cut to fit the irregular wall surface. Otherwise, it should be shimmed as shown in **Figure 27-25**. Molding can be used to cover any gaps.
7. Screw the cabinet to the wall. As the installation progresses, attach cabinets to each other as in Step 7 under Installing Base Cabinets on page 795. Small cabinets can be screwed together before being lifted into place, as shown in **Figure 27-26**. Make certain that the joining faces of the stiles are flush and the tops and bottoms of the cabinets are aligned before drilling pilot holes.

Figure 27-26 Pre-Assembling Small Cabinets
Time Saver When two or more narrow wall cabinets are placed side by side, fasten them together on the floor and then mount them on the wall as one unit.

Recessed Cabinets Small cabinets, called *recessed cabinets* or *medicine cabinets*, are sometimes installed in bathrooms. These small, shallow cabinets are designed to fit in a wall cavity between studs. This makes them especially suitable for small bathrooms.

The carcase of a recessed cabinet is only 3½" to 4" deep. These cabinets typically need little in the way of support because they are attached directly to the adjacent studs, or to blocking. To install a recessed cabinet, drive screws through both sides of the carcase and into the framing or blocking. Screw heads can be concealed with plastic caps.

Section 27.2 Assessment

After You Read: Self-Check

1. List the three types of manufactured cabinets.
2. What types of materials are used for cabinet drawers?
3. What is a frameless cabinet?
4. Which type of screws should be used to attach a wall cabinet to the wall?

Academic Integration: English Language Arts

5. **Cup Hinges** Cup hinges were devised for use on frameless cabinetry. Find out more about cup hinges and the advantages they offer. Write a paragraph discussing these advantages.

Go to **glencoe.com** for this book's OLC to check your answers.

Section 27.3 Countertops

Types of Countertops

What features must a countertop surface have?

Countertops for cabinets are usually covered with plastic laminate, solid surfacing (acrylic- or polyester-based materials such as Corian, Gibraltar, or Avonite), solid stone, or ceramic tile. In modern house construction, these materials are generally installed by a subcontractor who specializes in these products. However, one type of plastic laminate countertop is often installed by carpenters after the cabinets have been installed. This is a manufactured product called a *postformed countertop,* and is shown in **Figure 27-27**. The installation of postformed countertops will be described in this section.

Countertop Height While the limits for countertop heights range from 30" to 38", the standard height in a kitchen is 36". However, a kitchen designed according to universal design principles might contain countertops at several different heights to encourage use by anyone, including someone using a wheelchair.

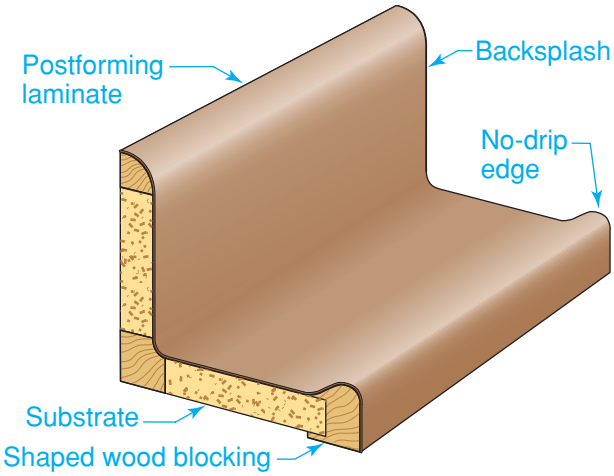

Figure 27-27 Postformed Countertop
Preassembled A postformed countertop includes a backsplash as well as a special front edge.

Preparation for Countertops

The preparation required prior to installing countertops varies according to the material. Sometimes the cabinet installer or general contractor will reinforce cabinets or provide a sub-base for the countertop material. In most cases, the countertop installer will handle this work. A countertop is shown in **Figure 27-28**.

Solid Stone Natural stone, such as granite, marble, limestone, and soapstone, is a popular countertop surface. The stone is cut to size, formed, and polished offsite, then delivered and installed by the fabricator. Solid stone is heavy. To ensure proper installation, cabinets must be securely anchored and the tops of the base cabinets must be perfectly flat. To make sure the stone will fit, the fabricator visits the site and makes a plywood template of the countertop area once the cabinets are in place.

Ceramic Tile Tile comes in a variety of shapes, sizes, and thicknesses, and is typically installed over cement backerboard. The backerboard must be supported by a plywood substrate. The substrate may be provided by the cabinet installers or by the tile contractor. The general contractor should coordinate their efforts.

Solid Surfacing Like solid stone, this synthetic material is usually applied directly to the tops of the cabinets. However, the cabinet installer may be asked to install wood cleats in areas to provide additional support for the material.

Plastic Laminate No particular preparation is needed prior to the installation of laminate countertops, but it is important that the tops of the cabinets are flat.

Plastic Laminate Countertops

Would universal design make postformed countertops easier or more difficult to install?

Plastic laminate, also called *high-pressure laminate,* is a durable and versatile countertop material. During manufacture, decorative surface papers soaked with melamine resins are pressed over kraft-paper core sheets soaked with phenolic resin. These

Figure 27-28 Countertop
Bathroom Countertops
Bathroom countertops are often made of stone, tile, or plastic laminate.

papers are then bonded together at pressures of at least 1,000 pounds per square inch (psi) and at temperatures approaching 300°F (149°C). After bonding, the sheets are trimmed to size. Because its surface papers can be printed before assembly, plastic laminate comes in a large number of colors and patterns.

The backs of the sheets are sanded to improve the **bond** with the substrate. A **substrate** is a material that serves as a base for another material. A substrate is used because plastic laminate itself is quite brittle. Common substrate materials are plywood and particleboard at least ¾" thick with no defects or voids in the surface. In residential construction, the laminate is usually adhered to the substrate with contact cement.

The following three grades of laminates are used in residential construction:

General Purpose This is approximately 1/16" thick and is used for countertops.

Vertical Surface This is a somewhat thinner product designed for use on surfaces that will receive less wear and impact.

Postformed This is the thinnest grade and can be used on vertical or horizontal surfaces. It is thin enough to follow curves, as on a bullnose edge. This makes it suited for use on postformed countertop sections.

Reading Check

Recall *What is a substrate and what is it used for?*

Postformed Countertops

Postformed countertops come with both a backsplash and a countertop edge, and feature post-formed grade plastic laminate that has been attached to a substrate at the factory. Postformed countertops come ready to install. If the end of a countertop will be exposed, pre-made end pieces are available. Postformed countertops are generally available in 8', 10', and 12' lengths, and they come in a wide variety of patterns and colors.

Builder's Tip

SCRIBING COUNTERTOPS Postformed countertops must sometimes be trimmed to fit between two existing walls that are not perfectly square. To solve this problem, obtain a 2' × 3' piece of cardboard or hardboard. Use it to represent one end of the countertop. Lay it in place on the cabinets, scribe it to the wall, and cut it. Then transfer the pattern to the countertop. Repeat the procedure at the other end of the countertop. After the countertop is cut, it should fit precisely.

Plastic laminates may be sawed, routed, and drilled. Because laminate dulls tools more quickly than wood, cutting edges must be sharpened often. Dull tools may chip the laminate. Whenever possible, use carbide-tipped cutting tools when working on postformed countertops.

Installation To install postformed countertops, perform the following steps.

1. Trim the countertop on site to fit the space exactly. You can do this using files or a power tool such as a jigsaw, router, or circular saw. You may have to scribe the top edge of the countertop backsplash to fit variations in the wall.
2. Once you trim the countertop to fit, fasten it in place by driving wood screws through cleats on the underside of the cabinet and into the underside of the countertop. First, drill the correct size pilot hole. Take care not to drill entirely through the countertop. Use a wood screw of the correct length so that it does not pierce the laminate when the countertop is pulled down snug against the top of the cabinets.
3. After the top is secured to the cabinets, apply a small bead of caulking compound at the joint between the wall and the back

Table 27-1: Approximate Installation Times for Postformed Countertops	
Countertop	**Time (hours)**
Postformed plastic laminate countertop	¼ (per lineal foot)
25" wide plastic laminate countertop with a 4" backsplash and self-edge	1 (per lineal foot)
Postformed plastic laminate mitered corner (L-shaped or U-shaped kitchen)	1
End cap on a postformed plastic laminate countertop	⅓

top edge of the backsplash. Some laminate manufacturers can supply caulk that is color-matched to the laminate.

4. Where sections of countertop meet, join them together with draw bolts and seal the joints with caulk.

Estimating Postformed countertops are sold by the lineal foot. The approximate installation times for postformed countertops are shown in **Table 27-1**.

Installing Laminate On Site

Though the application of plastic laminate to countertops is usually done off site, the contractor may encounter situations in which individual sheets of the material must be installed on a substrate on site. This might occur in remodeling projects, for example.

Plastic laminate sheet is sold by the square foot. Sheets are available in widths of 24", 30", 36", 48", and 60". The most common width is 24". The most common lengths range from 5' to 12'.

Applying the Adhesive Once the substrate has been attached to the top of the base cabinets, fill small holes and cracks with a spackling compound and then sand it flush with the surface. Vacuum the dust off all surfaces. For best results, all materials should be at room temperature (70°F [21°C] or more) before installation. The substrate should be clean, dry, and free of oil, grease, or wax.

1. Cut the laminate to approximate dimensions only. It will be trimmed to exact size after it has been adhered to a substrate.
2. Stir the adhesive thoroughly from the bottom of the can. Pour a small amount onto the back of the laminate. Spread the adhesive evenly, using a roller or a brush, as shown in **Figure 27-29**. A brush is recommended when applying adhesive to vertical surfaces or edges, or whenever the use of a roller is impractical. If you are using a brush, apply two coats to ensure proper coverage. Be sure to allow the adhesive adequate drying time between coats.

JOB SAFETY

USING CONTACT CEMENT When using contact cement, wear the appropriate safety equipment and follow all label precautions on the can. Low-VOC contact cement is not as hazardous as solvent-based contact cement but still requires care in handling and application. Make sure the work area is well ventilated. Use solvent-impervious gloves and a NIOSH-approved respirator if necessary.

Go to **glencoe.com** for this book's OLC for more on job safety.

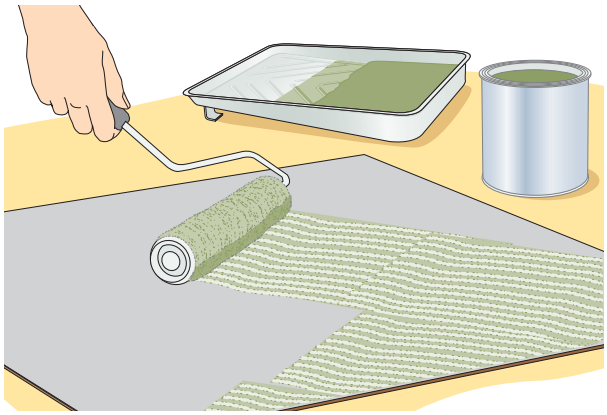

Figure 27-29 Spreading Adhesive
Even Coverage Spreading contact adhesive with a roller.

Mathematics: Calculation

Calculating Amount and Cost
Determine the amount and cost of materials for a kitchen island countertop that measures 37" wide and 47" long. The top has 1" edges around all 4 sides. The laminate costs $1.55 per square foot.

Starting Hint Find the area of the countertop, including its sides, in square feet. Then multiply times the cost per square foot.

3. Apply the adhesive to the substrate, and spread it with a brush or roller.
4. Let the adhesive dry according to instructions on the product label. Test the dryness of the adhesive by pressing a piece of paper lightly against it and pulling it away. If the adhesive sticks to the paper, more drying time is needed.
5. To make certain that you have applied enough adhesive, look across the surface into the light after the adhesive is completely dry. With most products, the surface will appear glossy. Spots that are dull after drying require additional adhesive.

Bonding and Trimming Laminate Install the laminate as soon as possible after the adhesive is dry.

1. Surfaces coated with contact cement will bond instantly when they touch. To prevent this from happening while you are positioning the laminate, place several dowel rods across the top of the substrate, as shown in **Figure 27-30**.
2. Align the laminate with the substrate so that an equal amount of laminate hangs over all edges. Use extreme care, because bonding is immediate upon contact.
3. Gently slip the center dowel rod out from beneath the plastic laminate, leaving the others in place. The two adhesive surfaces will come in contact with each other. Press to complete the bond.

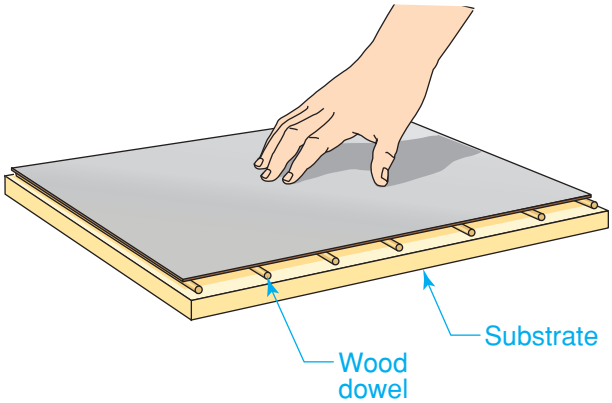

Figure 27-30 Positioning the Sheet
Getting Ready Use wood dowel rods to support the laminate while aligning it with the substrate. Be sure to use enough dowel rods to prevent sagging.

4. Remove the other dowel rods one at a time, working from the center toward the ends. This technique also helps to prevent air bubbles from being trapped beneath the laminate.
5. As you work, roll the surface outward from the center in all directions, using a wide, hard-rubber roller. If a roller is not available, use a block of soft wood with eased edges and corners. Place it at the center and work toward the edges, tapping sharply with a hammer. Tap or roll the entire surface to ensure a complete bond.
6. Use a router or laminate trimmer to remove the excess laminate that hangs over the edges of the substrate. A small

JOB SAFETY

TRIMMING LAMINATE When a router or laminate trimmer is used to trim plastic laminate, small sharp bits of the material are ejected from the tool at high speed. Wear suitable eye protection.

Go to **glencoe.com** for this book's OLC for more on job safety.

router can be fitted with a carbide trimming bit for this purpose. A type of router often used to remove excess laminate is called a *laminate trimmer,* as shown in **Figure 27-31**. It can be fitted with specialized attachments that make it a more versatile trimming tool than a standard router. Do not apply adhesive to other portions of the laminate until you have removed the debris from trimming.

Figure 27-31 Laminate Trimmer
One-Handed Router A laminate trimmer is essentially a small router with a specialized base to guide the tool.

Section 27.3 Assessment

After You Read: Self-Check

1. What is the standard height of a countertop in a kitchen?
2. What is done to plastic laminate sheets to improve the bond with the substrate?
3. What makes a postformed countertop easy to install?
4. What technique is often used when installing a postformed countertop between existing walls that are not perfectly square?

Academic Integration: Mathematics

5. **Labor Cost** Write an equation you could use to find the cost of labor for installing a postformed plastic laminate countertop with one mitered corner and an end cap. The countertop measures 14 lineal feet (refer to Table 27-1 on page 801).

   Math Concept The cost for labor can be found by multiplying the rate at which the installer is paid by the time it takes to install the countertop, rounded to the nearest hour. The rate of pay can be represented using the letter *r*.

   Step 1: Look at Table 27-1. Calculate the time by adding three elements: the time per lineal feet multiplied by the number of lineal feet, the time required for a mitered corner, and the time required for an end cap.

   Step 2: Round the time to the nearest hour. Multiply by the rate.

Go to **glencoe.com** for this book's OLC to check your answers.

CHAPTER 27

Review and Assessment

Chapter Summary

Section 27.1

The basic arrangement of cabinets for a room is shown on the building plans. Kitchen layouts include U shape, L shape, parallel wall, side wall, and island. Work centers include those for food preparation, cooking, and cleanup. Bathroom layouts are much less flexible because of plumbing requirements.

Section 27.2

Manufactured cabinets may be stock cabinets, semi-custom cabinets, or custom cabinets. The carcase is the cabinet's basic framework. The face frame provides a surface for mounting hinges and other hardware. Doors may be of the inset or overlay type. Cabinet hardware includes drawer guides, door hinges, knobs, and pulls. Cabinets must be plumb, level, and securely attached to wall studs. Several cabinets that run together must be attached to one another.

Section 27.3

Many countertops are made of plastic laminate glued to a substrate. The most common type of laminate countertop is a postformed countertop. However, conventional laminates can be purchased separately and installed on site.

Review Content Vocabulary and Academic Vocabulary

1. Use each of these content vocabulary and academic vocabulary words in a sentence or diagram.

Content Vocabulary

- wall cabinets (p. 781)
- base cabinets (p. 781)
- universal design (p. 781)
- work triangle (p. 782)
- stock cabinets (p. 788)
- semi-custom cabinets (p. 788)
- custom cabinets (p. 788)
- carcase (p. 788)
- face-frame cabinet (p. 788)
- frameless cabinet (p. 789)
- substrate (p. 800)

Academic Vocabulary

- design (p. 781)
- increments (p. 788)
- bond (p. 800)

Speak Like a Pro

Technical Terms

2. Work with a classmate to define the following terms used in the chapter: *casework* (p. 780), *two-wall galley kitchen* (p. 781), *galley kitchen* (p. 782), *vanity cabinets* (p. 785), *filler strips* (p. 788), *32-mm system* (p. 788), *inset doors* (p. 790), *flush doors* (p. 790), *overlay doors* (p. 791), *slides* (p. 792), *barrel hinges* (p. 793), *knife hinges* (p. 793), *cup hinges* (p. 793), *concealed hinges* (p. 793), *recessed cabinets* (p. 797), *postformed countertop* (p. 798), *laminate trimmer* (p. 803).

Review Key Concepts

3. Describe the five basic kitchen layouts.

4. Explain how frameless cabinet construction differs from face-frame construction.

5. Demonstrate how to install a base cabinet.

6. Demonstrate how to install a wall cabinet.

7. Practice how to install a postformed countertop.

8. Describe how plastic laminate is applied to a surface.

Critical Thinking

9. Discuss When applying adhesives, it is recommended that all materials be at room temperature. Discuss some potential difficulties that may arise if some materials are at room temperature and others are above or below room temperature.

Academic and Workplace Applications

STEM Mathematics

10. Converting Fractions and Estimating As a cabinet installer, you will be doing a number of installations for a homeowner. An important part of your job will be to estimate how long it will take you to complete the work. Figure out how long it will take you to install the following items: one sink cabinet, one base corner cabinet, one 84" bathroom vanity, and one oven cabinet. Refer to the table in the Estimating and Planning feature on page 786 to make your estimate. Then figure out how much you should charge the homeowner if your hourly rate is $25 per hour.

Math Concept To multiply a whole number by a fraction, you can convert the fraction to a decimal and multiply. Or, think of the whole number as having a denominator of 1. Multiply the numerators, then the denominators, then simplify.

Step 1: Add the total number of hours required to complete all installations.

Step 2: Multiply the total hours by the hourly rate.

STEM Engineering

11. Properties of Materials Imagine that you are building a woodworking shop at home in your garage or basement. When considering material for your countertops, you have many choices of material. Wood, granite or other stone, tile, laminate, even cement are all possibilities. Research the characteristics and attributes of your various choices and decide which would be best. Write one or two paragraphs explaining why you would choose one material in favor of others.

21st Century Skills

12. Communication Skills Assume you are remodeling a bathroom in a private home. The client has chosen base cabinets that measure 40" high and 32" deep. Through your experience as a cabinet installer, you know that these dimensions will not work in the bathroom. How would you convince the client to change his or her mind? Write a paragraph explaining why the cabinet choice is not appropriate. Tell which type of cabinet would be a better fit. Be convincing, but remember to explain your recommendations to the client in a way that will not upset or offend him or her.

Standardized TEST Practice

CERTIFICATION PREP

True/False

Directions Read each of the following statements carefully. Mark each statement as either true or false by filling in **T** or **F**.

(T) (F) **13.** The kitchen is the room that has the largest number of cabinets.

(T) (F) **14.** Custom cabinets are built in standard sizes and stored in a warehouse until ordered.

(T) (F) **15.** There is only one way to install factory-built cabinets.

TEST-TAKING TIP

Do not leave true/false questions unanswered if you do not know the answer. Remember that you have a 50 percent chance of getting the question right if you guess.

*These questions will help you practice for national certification assessment.