CHAPTER 32

Wall & Ceiling Surfaces

Chapter Objectives

After completing this chapter, you will be able to:

- **Name** and describe the various types of drywall.
- **Identify** the different types of fire-code drywall.
- **Describe** a nail pop and explain the methods used to prevent it.
- **Explain** potential safety and health problems related to installing drywall and explain preventative measures.
- **Identify** the basic materials used in three-coat plaster work.
- **Construct** a suspended ceiling.

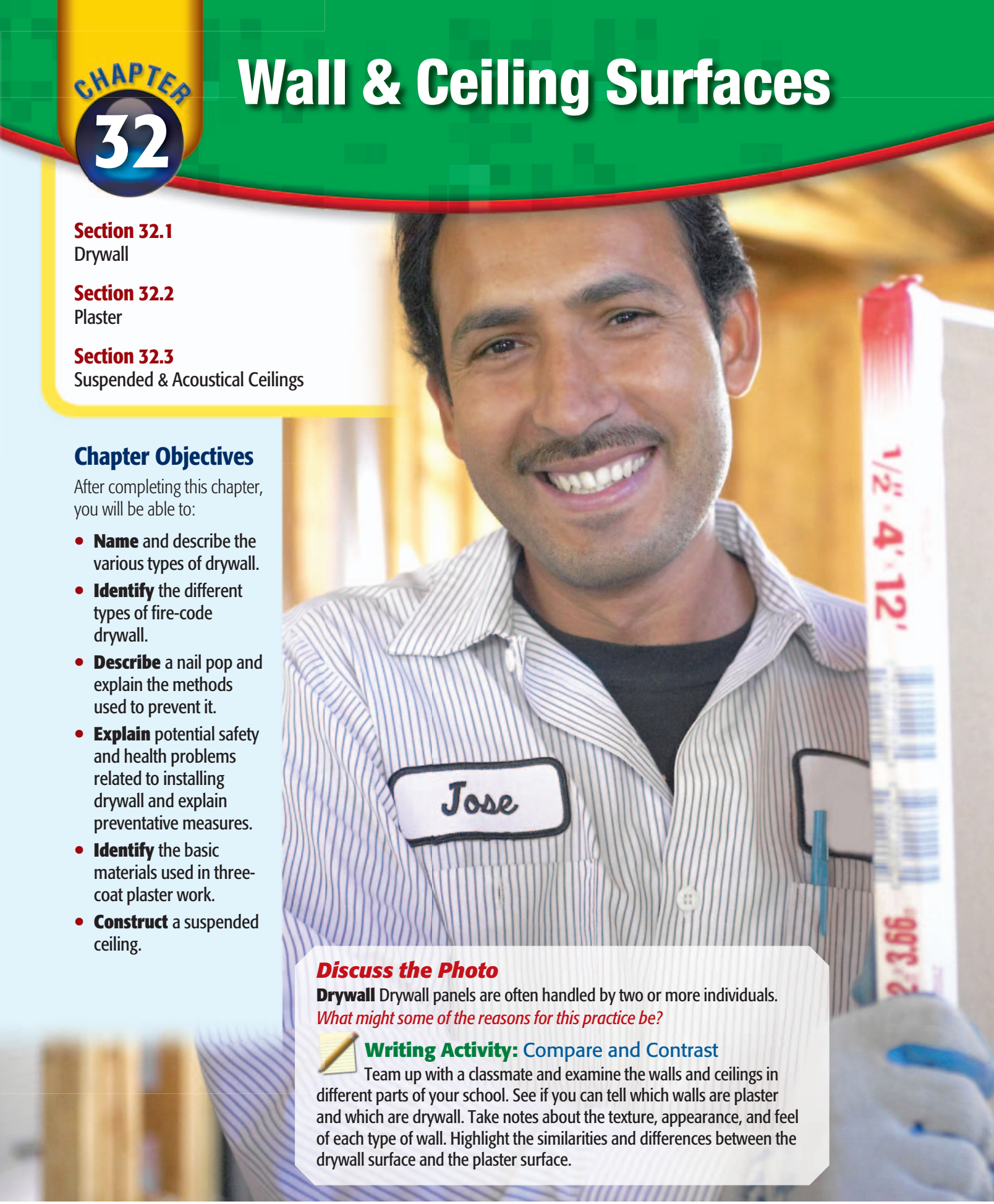

Discuss the Photo

Drywall Drywall panels are often handled by two or more individuals. *What might some of the reasons for this practice be?*

Writing Activity: Compare and Contrast

Team up with a classmate and examine the walls and ceilings in different parts of your school. See if you can tell which walls are plaster and which are drywall. Take notes about the texture, appearance, and feel of each type of wall. Highlight the similarities and differences between the drywall surface and the plaster surface.

Chapter 32 Reading Guide

Before You Read Preview

Drywall and plaster are the two most common wall and ceiling finishing systems used in residential construction. Suspended ceilings are sometimes installed when access is needed. Choose a content vocabulary or academic vocabulary word that is new to you. When you find it in the text, write down the definition.

Content Vocabulary

- corner bead
- feathering
- veneer plaster
- lath
- ground
- suspended ceiling
- acoustical ceiling

Academic Vocabulary

You will find these words in your reading and on your tests. Use the academic vocabulary glossary to look up their definitions if necessary.

- stable
- enables

Graphic Organizer

As you read, use a chart like the one shown to organize information about types of walls and ceiling materials and their characteristics, adding rows as needed.

Type of Material	Characteristics
drywall	made of gypsum and covered with paper

Go to glencoe.com for this book's OLC for a downloadable version of this graphic organizer.

Academic Standards

Mathematics

Problem Solving: Solve problems that arise in mathematics and in other contexts (NCTM)

Problem Solving: Monitor and reflect on the process of mathematical problem solving (NCTM)

Geometry: Apply transformations and use symmetry to analyze mathematical situations (NCTM)

Geometry: Use visualization, spatial reasoning, and geometric modeling to solve problems (NCTM)

English Language Arts

Use language to accomplish individual purposes (NCTE 12)

Industry Standards

Engineered Products, Panels, and Sheet Goods

Drywall Application

Installing Suspended Ceilings

NCTE National Council of Teachers of English

NCTM National Council of Teachers of Mathematics

NSES National Science Education Standards

Section 32.1

Drywall

Drywall Basics

Why are there different types of drywall?

After the mechanical systems have been roughed in and the house has been insulated, interior wall and ceiling materials can be applied. The choice of surface must be made as the house is being designed. However, drywall is the material most commonly used in residential construction. Plaster is another choice and, in some cases, the two can be used together. Wood paneling, another finishing choice, is discussed in Chapter 28.

Understanding Drywall

Drywall consists of sheets, or panels, made of a noncombustible gypsum core covered with paper. It is also known as *gypsum wallboard, gypsum board,* or by various trade names. Natural gypsum is a mineral rock. After it is mined, it is ground to a powder and baked. The resulting material is mixed with water and other ingredients. It is then sandwiched between the sheets of recycled paper to form drywall panels. A smooth-finish paper called *face paper* is applied to the front of the panel. A somewhat rough paper called *liner paper* is applied to the back.

Unlike plaster, the large sheets of drywall can be applied quickly. They do not require lengthy drying time before other work can progress. Strongest in the long dimension, drywall is dimensionally **stable** and inexpensive. Like plaster, it has fire-resistant properties. It can serve as a substrate for other finish materials, such as paint, wood paneling, or wallpaper. (A *substrate* is a material that serves as a base for another material.) On small projects drywall may be installed by general contractors or other trades, but in larger projects drywall is installed by specialized drywall contractors such as those in **Figure 32-1**.

Types of Drywall

Drywall panels are available in many types, sizes, and thicknesses for a variety of conditions. The following types of drywall panels are common in residential construction.

Standard Drywall Drywall sheets are commonly 4' wide and 8' long. Panels are also available in lengths of 9', 10', 12', and 14'. Long panels speed construction but can be unwieldy to work with. Panels that are 4'-6" wide are sometimes applied horizontally

Figure 32-1 Installing Drywall
Specialized Skills Drywall contractors have the tools and equipment to install drywall quickly and efficiently.

Jupiter Images/Banana Stock/Alamy

to reduce installation costs where walls are 8'-6" or 9' tall. The most common thickness for drywall is ½". However, ⅜" and ½" panels are used for covering old surfaces, for covering curved walls, and when layering to reduce sound transmission. Drywall is also available in thicknesses of ⅝" and ¾".

Face paper wraps around the long edges of the panel but does not cover the short edges. The edges along the length of a panel are tapered and, on some types, the ends are also tapered. Tapering allows the joints between panels to be filled and smoothed. Sheets with square-cut long and short edges are used as a substrate for paneling and other materials.

Fire-Code Drywall When certain additives are mixed with the gypsum, drywall becomes more fire resistant. The resulting product is generally referred to as *fire-code drywall*. It is important to understand that a fire-resistant product slows the passage of fire but does not completely stop it. Type-X fire-code drywall is ⅝" thick. It contains glass fibers that prevent it from crumbling in extreme heat. This drywall is required by building code on the outer surface of walls separating an attached garage from the house. This improves the fire resistance of the wall. It is also required on garage ceilings if the garage is beneath a habitable room. Type-C drywall is even more fire resistant than Type-X. It contains vermiculite and comes in thicknesses of ½" and ⅝". Type-C is sometimes used to provide extra fire resistance to ceilings. In commercial construction, multiple layers of fire-code drywall are sometimes installed to increase the fire-resistance of walls.

Moisture-Resistant Drywall In areas of high humidity, such as bathrooms, MR (moisture-resistant) drywall should be used. This material is often called *green board* for the color of its paper facing. The core is a water-resistant type of gypsum. The face and back paper are chemically treated to reduce moisture penetration. MR drywall comes in ½" and ⅝" thicknesses. Fire-code MR drywall (Type X and Type C) is also available. Green board was once considered suitable as a backing for ceramic tile in shower stalls and in tub/shower surrounds. However, starting with the 2006 IRC, green board is no longer allowed in these locations, except on ceiling surfaces. Instead, cement, fiber-cement backer board, and glass-mat gypsum board may be used. Glass-mat gypsum board is sometimes called *paperless drywall* because the front and back surfaces are covered by a thin fiberglass material instead of paper.

Specialty Drywall Various types of drywall are available to solve specific building problems. Unlike standard drywall, which is readily available, specialty products may have to be ordered in advance.

Foil-Back Drywall This features a layer of aluminum foil on the back surface that serves as a vapor retarder.

Flexible Drywall This is typically installed as double-layer system to cover curved interior walls. The ¼ in. thick sheets are more flexible than standard ¼" drywall sheets.

Sound-Resistant Drywall This is a gypsum product that contains a layer of sound-absorbing polymers that significantly reduce sound transmission through the material.

Reading Check

Recall *What two types of paper are applied to the front and back of a drywall panel?*

Fasteners

Drywall panels must be securely fastened to wood or steel studs with special nails or corrosion-resistant screws. Drywall nails have thin, flat heads so that they can be slightly countersunk by the rounded nose of a drywall hammer. This will not damage the surface of the panel. Standard drywall nails have smooth shanks, but annular-ring (ring-shank) drywall nails offer better holding power. Drywall ½" thick requires a nail at least 1¼" long.

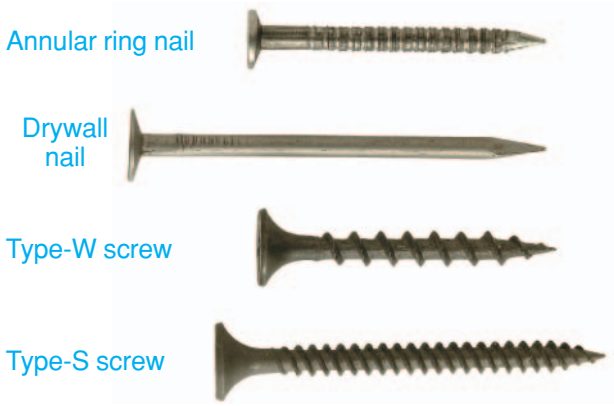

Figure 32-2 Drywall Fasteners
Nails and Screws Common types of drywall fasteners.

Drywall screws provide much better holding power than nails. They have a Phillips-type bugle head and an unusually sharp point. Type-W drywall screws are used for wood framing and must be long enough to penetrate wood framing at least ⅝" into wood framing. They have wide threads that drive quickly and grip the wood aggressively. Type-S drywall screws are used for steel framing and should be long enough to penetrate steel studs at least ⅜". They have narrow threads. Neither type of screw requires a pre-drilled pilot hole. Common drywall fasteners are shown in **Figure 32-2**.

Joint Compound

Joint compound is a thick, paste-like material. It is used in combination with joint reinforcing tape made of perforated paper or self-adhesive fiberglass mesh to conceal the joints between panels. By itself, joint compound is used to fill nail dimples and is sometimes used for texturing the panel's surface. It can be purchased in ready-mixed or powder form.

There are many different options when it comes to choosing joint compound. Contractors may choose a particular joint compound based on various factors, including strength, sandability, and curing time. For example, some compounds are very strong but difficult to sand. Others are relatively weak but easy to sand. Various compounds might be used on the same job. For example, a contractor may use a strong compound, often called a *setting compound,* to embed paper joint tape. Strength and crack-resistance are particularly important at this stage. However, the contractor might layer a different compound over the first one so that the joint will be easier to sand. The additional layers would be a type of compound called a *topping compound.* A topping compound shrinks very little and finishes smoothly. In other situations, a contractor might decide to use a single compound for bedding and topping. This type of compound is called an *all-purpose joint compound.* It is fairly strong and fairly sandable. All compounds, however, fall into one of two basic categories based on how they harden.

Drying-Type Compounds This type of compound cures as it looses moisture. Differences in house humidity and temperature can slow or speed up drying time. Drying-type compounds are available in ready-mixed (pre-mixed) and powdered forms.

Setting-Type Compounds This compound cures through a chemical process. It is less affected by humidity and temperature and cures more quickly than drying-type compounds. It can also be recoated even if it is not completely dry. Setting-type compounds are stronger than drying-type compounds so they are sometimes preferred when

Builder's Tip

MIXING JOINT COMPOUND Powdered joint compound stored in open bags can absorb moisture from the air. This will cause it to form lumps when it is mixed with water. Always use water at room temperature because cold water can also make it difficult to reach an even consistency. Do not pour water into dry compound. Instead, mix compound into the water, gradually adding more powder until the right consistency is reached.

embedding tape. However, they are more difficult to sand and they take more time to prepare. Setting-type compounds are available only in powdered form and must be mixed with water just before use.

Ready-mixed joint compound is easy to use because it does not have to be mixed. However, it is heavy to transport and will freeze if stored in a cold area. Frozen compound that is slowly thawed at room temperature will not be damaged. Repeated freeze/thaw cycles make the material more difficult to work with. Powdered compound must be mixed with clean water before use. However, it has a long shelf life and can be stored at any temperature.

Trim Accessories

A wide variety of metal and vinyl shapes can be used to cover and protect the edges of drywall sheets after they have been installed. At outside wall corners, one edge of the drywall overlaps the intersecting edge. Corner bead is then nailed, screwed, or crimped (using a special tool) over the entire length of the corner, as shown in **Figure 32-3**. **Corner bead** is a vinyl or galvanized metal strip that reinforces and protects the corner. It comes in lengths of 8' and 10'. Standard corner bead forms a square 90° corner. *Bullnose corner bead* forms a rounded 90° corner. Other trim can be used to finish or protect drywall edges near window and door jambs and where drywall meets another material. One example of this is J-trim.

Repairing Drywall

If drywall panels are not properly stored, installed, or finished, various problems may become evident. Problems are nearly always found along joints or directly above fasteners. However, mechanical damage can damage other areas of the panel. Often, problems will appear shortly after the drywall has been taped and finished. In some cases, they may not appear until much later. Following are some common problems, along with suggested repairs.

Improperly Fitted Panels Drywall panels must not be butted tightly against each other or against other materials. This can stress the panel and prevent it from fitting against the framing. Fasteners will then puncture the paper as they are driven. To repair the panel, remove it and cut it to fit properly. Always hold the panel tightly against framing while driving fasteners. Do not drive new fasteners through the old holes.

Damaged Face Paper The face paper of a panel can be damaged during storage or during installation. If the damage affects only the paper and little of the underlying panel, repair is simple. Small punctures should be filled with joint compound. If the paper is torn or loose, peel it back to solidly adhered paper and topcoat the area with joint compound.

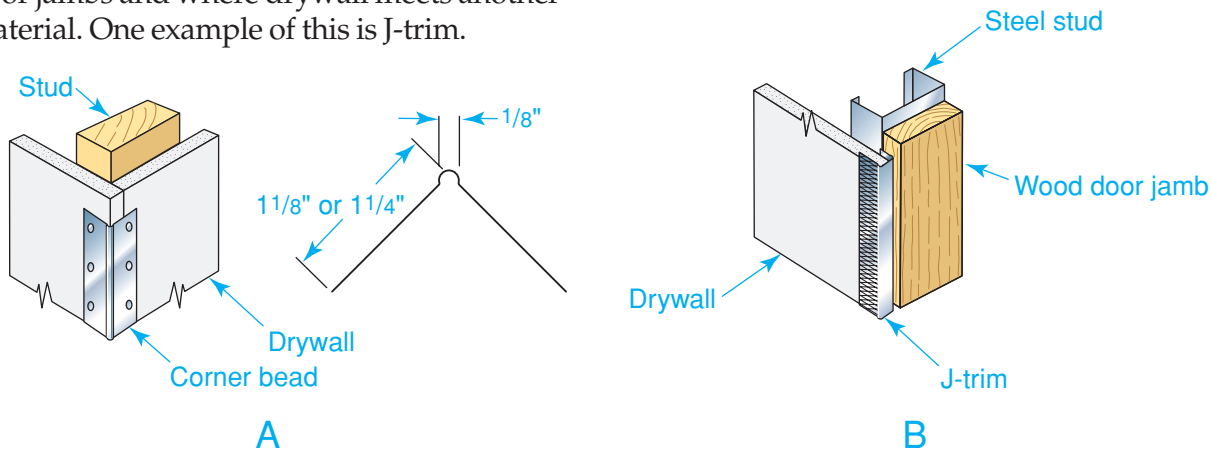

Figure 32-3 Drywall Trim

Edge Protection **A**. Corner bead protects the outside corners of a wall. Note how the drywall panels overlap. **B**. Products such as J-trim can be used to provide a finished edge where drywall meets another material.

Loose or Unseated Fasteners If a nail or screw has not been fully driven into the framing, it may become loose. In other cases, it may stick up above the surface of the drywall (called an *unseated* fastener). To repair the panel, loose nails should be removed, and a new nail or screw should be driven nearby. Unseated nails or screws can be driven to a proper depth as long as the drywall is tight against the framing.

Large Holes Panels are sometimes damaged after installation by subsequent construction activities. A hole that goes completely through a panel can be repaired in place. However, if the damage is extensive, it may be easier to remove the entire panel and replace it. The repair method depends on the extent of the damage. In general, the damaged area must be cut away so that a patch of new drywall can be fit into place. Cut the patch first, then use it as a template for cutting out the damaged area. The edges of the patch must be supported by drywall repair clips, wood furring strips, or by scraps of drywall. Fit the patch into place and screw it to the supports.

Blistered Tape Various problems can result in blistered joint tape, including using too much or too little compound, not pressing the tape into place firmly, or scraping the joint dry with taping knifes. If the blistered area is small, slit the tape to open it up, fill the area with joint compound, and press the tape into the compound. If blistering affects an entire joint, remove the tape and loose joint compound. Then retape the joint.

Cracked Tape Over Flat Joint This is generally related to stresses in the panel caused by structural movement. It may also be due to the expansion and contraction of long walls. Once the causes of structural movement have been corrected, retape the joint.

Cracked Tape Over Inside Corner Joint This could have several causes: too much compound in the corner, corner tape damaged during installation, or structural movement between intersecting surfaces. Hairline cracks can be filled with joint compound. If joint tape is slit, remove it and retape. If structural movement is suspected, remove fasteners closer than 6" to the angle and retape. This allows the joint to flex somewhat.

Cracking Over Corner Bead or Trim Several causes are possible: too rapid drying in hot weather, use of topping compound instead of taping compound, or application of unusually cold or wet compound. To repair the panel, remove cracked compound. Make sure corner bead is securely fastened, then reapply fresh compound.

Defective Joints Excess buildup of joint compound can create obvious lumps over the joints. Applying compound over previous layers that are not yet dry can result in concave surfaces. To repair the panel, sand down excess layers but do not scuff up the joint paper beneath. Then feather out the joint. Always let compound dry thoroughly before adding another layer. Concave joints must be filled with compound.

Nail Pops Repeated shrinkage and expansion of wood framing can cause nails to back out of the framing, resulting in a raised area called a *nail pop*. To repair, remove the nail and drive a screw nearby.

Bulge Around Fasteners If fasteners are driven too deeply, the face paper of the drywall will be punctured. Joint compound may then cause the edges of the paper to swell. If this happens, drive a screw near the damage, remove the damaged face paper, and repair the area using a setting-type compound.

Drywall Tools

What are the benefits of specialized lifting equipment?

Special installation and finishing tools are required for drywall work. In addition, specialized lifting and transport equipment should be considered for carrying panels from the delivery truck directly into the house. This speeds up construction. It also improves safety because the heavy, awkward

Figure 32-4 Installation Tools
Basic Tools Drywall installation tools. **A.** Layout square **B.** Chalk line **C.** Tape measure **D.** Drywall hammer **E.** Screw gun **F.** Drywall saw with replaceable blade **G.** Utility knife **H.** Drywall router *How can a drywall utility saw and a drywall router be used for a similar purpose?*

sheets do not have to be carried by hand. It also reduces the chance that sheets will be damaged as they are carried. In some cases, truck-mounted drywall booms can be used to transfer sheets directly from the truck to various locations within the house.

Installation Tools

Installation tools such as those shown in **Figure 32-4** are used to lay out, cut, and attach drywall panels to structural members.

Tape Measure, Chalk Line, and Drywall Square These tools are used to measure and mark drywall panels for cutting. The metal drywall square can also be used to guide a utility knife.

Utility Knife Drywall is easily cut with a utility knife. When very straight cuts are required, guide the utility knife with a drywall square.

Drywall Utility Saw Small cutouts for electrical boxes and other openings are made with a drywall utility saw, sometimes called a *jab saw.* It is similar to a keyhole saw but has a stiffer blade and larger, sharper teeth. Most saws have a sharp, stiff point that can pierce drywall when starting a cut. Others have a replaceable blade.

Drywall Router Some workers prefer to use an electric tool for making holes in drywall panels. The routers bit can be plunged into the drywall. The bit can follow the contours of an electrical box.

Drywall Hammer The domed striking surface drives nails just below the surface of the drywall without tearing the face paper. The hatchet-type head can be used for cutting large holes.

Screw Gun A screw gun is similar to an electric drill but has a depth-sensitive nosepiece instead of an adjustable chuck. A Phillips bit fits into the head. The tool drives

JOB SAFETY

WATCH YOUR FINGERS! A utility knife is very sharp. Many workers are cut when a knife slips unexpectedly. When cutting drywall, keep your hands well away from the knife's path. Also, keep the knife in a leather sheath when not using it, rather than in a pocket.

Go to **glencoe.com** for this book's OLC for more on job safety.

a drywall screw quickly to the correct depth (slightly recessed) without overdriving it. Some screw gun models, such as the one in Figure 32-4, include a magazine that feeds collated screws to the nosepiece.

Drywall Jack This tool, shown in **Figure 32-5**, is sometimes called a *panel hoist* or a *drywall lift*. It lifts panels and holds them against framing until they can be secured with nails or screws. It is especially useful when installing drywall on ceilings.

Finishing Tools

Tools used during the finishing process are shown in **Figure 32-6**. Some are designed to allow workers to reach awkward locations. Others are used to conceal joints between panels and fill dimples left by nails and screws.

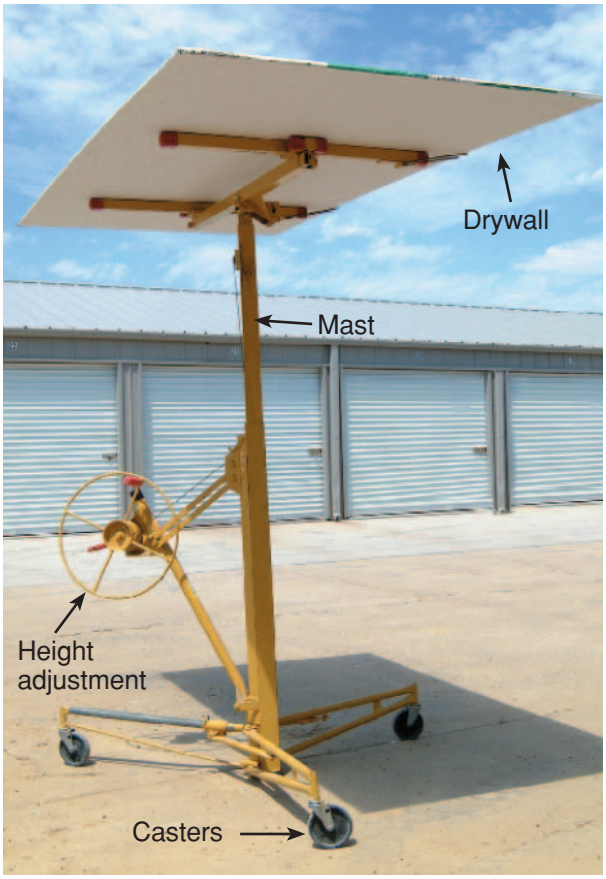

Figure 32-5 Drywall Jack
Back Saver A drywall jack can be used to hold panels against a ceiling as they are being fastened.

Taping Knives Knives are used to spread and smooth joint compound. The thin, flexible blades are made of blued steel or stainless steel. They are available in depths of 2¼" and 3" and in various widths. Knives 6" or 8" wide are used for setting tape. Knives up to 20" wide are used for applying finish coats. Handles are made of wood or a cushioned material.

Corner Trowel The blade is angled at 103° and flexes to 90° for finishing inside corners.

Pole Sander This sanding block has a foam rubber pad that is attached to a ¾" diameter pole. It holds strips of sandpaper or sanding screen (an open grid coated with carbide grit). The wood pole **enables** the user to reach all parts of a wall or ceiling safely.

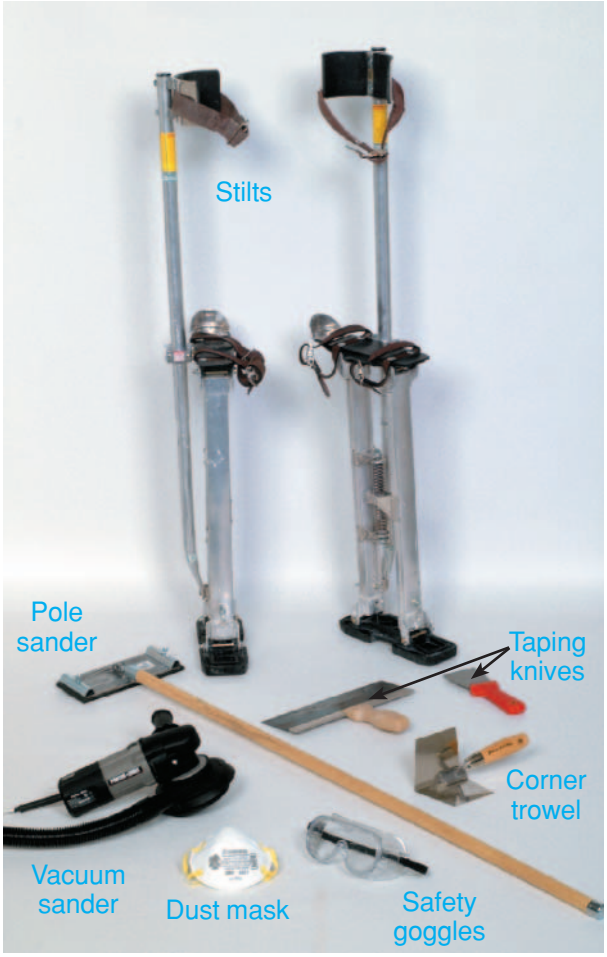

Figure 32-6 Finishing Tools
Basic Tools Drywall finishing tools.

Dust Mask/Respirator A NIOSH-approved dust mask reduces exposure to sanding dust that can cause eye, nose, throat, or upper-respiratory irritation.

Safety Glasses or Goggles Properly fitted, these protect eyes from sanding dust.

Vacuum Sander This vacuum-assisted device is used to sand drywall and collect the dust.

Stilts Stilts allow the user to reach ceilings without repeatedly climbing a ladder or scaffold, as shown in **Figure 32-7**.

Figure 32-7 Drywall Stilts
No Ladder Required Drywall stilts in use while installing drywall.

Installing Drywall

When would you install a double layer of drywall?

Drywall is generally attached directly to framing in a single layer. The maximum spacing of framing members for various thicknesses of drywall is shown in **Table 32-1** on page 924. However, double-layer installations are sometimes used to dampen sound transmission between rooms. In such cases, the first layer is fastened to the studs, and the second layer is attached to the first using drywall adhesive and a minimum number of fasteners. The basic techniques for installing drywall on wall and ceiling surfaces apply to other applications as well, including applying drywall to cabinet soffits and using it to conceal I-beams and posts. In each application, wood or metal framing blocking must be in place as a support system for the drywall. For more on blocking, see Chapter 16.

Installing Drywall Over Masonry

Drywall can also be applied to concrete or concrete block walls. With interior walls that are above grade, the drywall can be adhered directly to the masonry, usually by using setting-type joint compounds as the adhesive. Where masonry walls are below grade or form exterior walls, they must first be properly dampproofed. Then metal furring channels must be attached to the walls and drywall is screwed to the channels. This creates a continuous 1" minimum airspace behind the drywall that helps to prevent moisture problems.

Cutting Drywall

Drywall is easily cut to fit a wall. Most cuts can be made with a utility knife or drywall saw. Panels can be cut one by one off the top of a stack. However, it is generally more convenient to cut a panel when it is leaning against a wall surface, with its long edge on the floor. There are three basic types of cuts that are made in drywall.

Table 32-1: Nailing and Structural Support for Drywall					
Thickness of Gypsum Board (inches)	Application	Orientation of Gypsum Board to Framing	Maximum Spacing of Framing Members (inches OC)	Maximum Spacing of Fasteners (inches)	
				Nails	Screws [a]
Application without Adhesive					
⅜	Ceiling [b]	Perpendicular	16	7	12
	Wall	Either direction	16	8	16
½	Ceiling	Either direction	16	7	12
	Ceiling [b]	Perpendicular	24	7	12
	Wall	Either direction	24	8	12
	Wall	Either direction	16	8	16
⅝	Ceiling	Either direction	16	7	12
	Ceiling [c]	Perpendicular	24	7	12
	Wall	Either direction	24	8	12
	Wall	Either direction	16	8	16
Application with Adhesive					
⅜	Ceiling [b]	Perpendicular	16	16	16
	Wall	Either direction	16	16	24
½ or ⅝	Ceiling	Either direction	16	16	16
	Ceiling [b]	Perpendicular	24	12	16
	Wall	Either direction	24	16	24

[a] Screws shall be Type-S or Type-W per ASTM C 1002 and shall be sufficiently long to penetrate wood framing not less than ⅝ inch and metal framing not less than ⅜ inch.
[b] ⅜-inch-thick single-ply gypsum board shall not be used on a ceiling where a water-based textured finish is to be applied, or where it will be required to support insulation above a ceiling. On ceiling applications to receive a water-based texture material, either hand or spray applied, the gypsum board shall be applied perpendicular to framing. When applying a water-based texture material, the minimum gypsum board thickness shall be increased from ⅜ inch to ½ inch for 16-inch OC framing, and from ½ inch to ⅝ inch for 24-inch OC framing or ½-inch sag-resistant gypsum ceiling board shall be used.
[c] Type-X gypsum board for garage ceilings beneath habitable rooms shall be installed perpendicular to the ceiling framing and shall be fastened at maximum 6 inches OC by minimum 1⅞ inches 6d coated nails or equivalent drywall screws.

Cuts Across the Sheet This cut is the most common and the easiest cut to make. It is made from one edge to an adjacent or opposite edge using a sharp utility knife, as shown in **Figure 32-8**.

After marking the length on the edge of a sheet, score through the face paper using a utility knife guided by a drywall square, as in Figure 32-8A. It is not necessary to cut entirely through the drywall. Be sure that your fingers are out of the way when scoring. Experienced installers anchor the bottom of the square with a foot to prevent it from slipping. When the entire cut line has been scored once, snap the drywall backwards along the score line and fold the two sections away from the scored line, as in Figure 32-8B. To separate the pieces, slice through the backing paper, then pull the pieces apart as in Figure 32-8C.

Cuts Within the Sheet When an electrical box, heating duct, or other object will penetrate

A B C

Figure 32-8 Cutting Drywall
Score, Snap, Separate Cutting drywall. **A**. Scoring with a utility knife. Note that the left hand is out of danger. **B**. Snapping the sheet along the scored line. **C**. Separating the pieces after cutting through the backing paper.

the drywall, a hole must be cut for it that is just slightly larger than the object. One way to do this is to measure the position of the object and then transfer its position and shape to a sheet of drywall. The hole can then be cut using a drywall saw. The point of the saw is simply pushed through the surface of the drywall until the saw's teeth are able to cut. Contractors often prefer a quicker method when cutting holes for electrical boxes. With the drywall sheet held in place on the wall, they use a drywall router to cut along the outer perimeter of the box, as in **Figure 32-9**.

Cuts at the Edge of a Sheet When notching drywall to fit around obstructions such as windows, use a drywall saw to cut through the panel along one or more layout lines. Then score the intersecting line with a utility knife and snap the piece off, as shown in **Figure 32-10**.

Figure 32-9 Cutting for Electrical Boxes
Quick and Accurate Holes for electrical boxes and other objects can be cut with a drywall router.

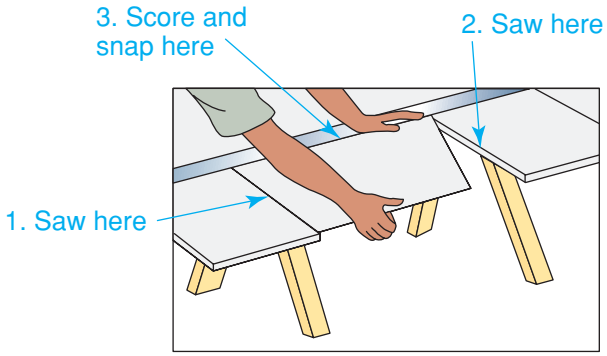

Figure 32-10 Notching Drywall
Cuts Made from the Edge Make two saw cuts. Then score the drywall and snap it downward.

Fastening Drywall

Once the drywall has been cut to fit, it can be nailed or screwed to the wall. Always fasten drywall beginning at the center of the sheet, and then work toward the ends. This prevents the sheet from buckling. Hold the sheet tight against the framing as the fastener is driven, but never force drywall into position.

Drywall is generally applied to the ceiling first. The advantage of this method is that the edges of the ceiling drywall will be supported by drywall on the walls. Drywall ½" thick is common on walls and ceilings. However, some contractors prefer ⅝" thick drywall on ceilings because it is stiffer and better able to support the weight of ceiling insulation.

Vertical Application The edges of drywall should be supported by framing members, as shown in **Figure 32-11**. On walls, a standard drywall sheet can typically be positioned vertically without being trimmed to length. If the stud spacing is standard, most sheets will not have to be trimmed to width. Where sheets must be cut, however, align the sheet so that its edges fall on framing members. If necessary, install blocking to provide adequate support.

Horizontal Application The building code allows drywall to be installed with unsupported edges in certain cases. For example, if drywall sheets are installed with the long dimension perpendicular to the studs, no blocking is required for the horizontal joint between sheets. However, some contractors provide nailing blocks anyway, as shown in **Figure 32-12**. When sheets are installed horizontally, the upper sheet is generally installed first to provide the best fit at the ceiling/wall corner. Any modest gaps at the floor will be covered by baseboard. Horizontal application is generally preferred for the following reasons:

- The lineal footage of joints is reduced by up to 25 percent.
- Horizontal panels can more easily bridge studs that are not precisely aligned.

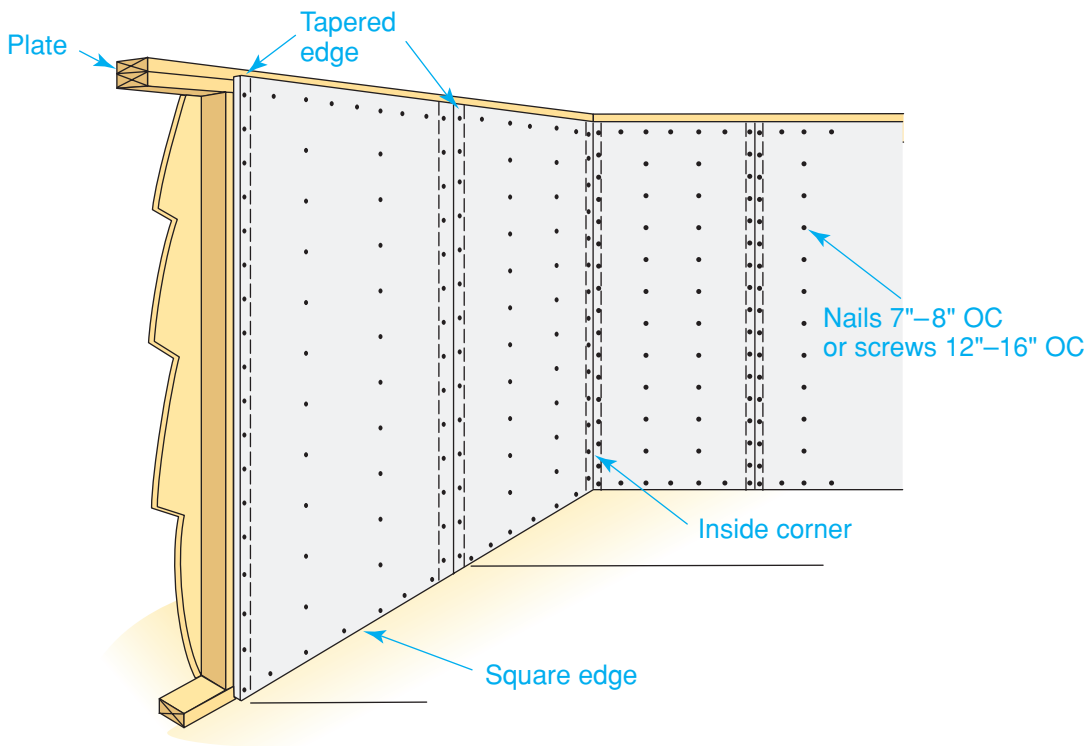

Figure 32-11 Vertical Application
All Edges Supported Installation of full drywall sheets on walls.

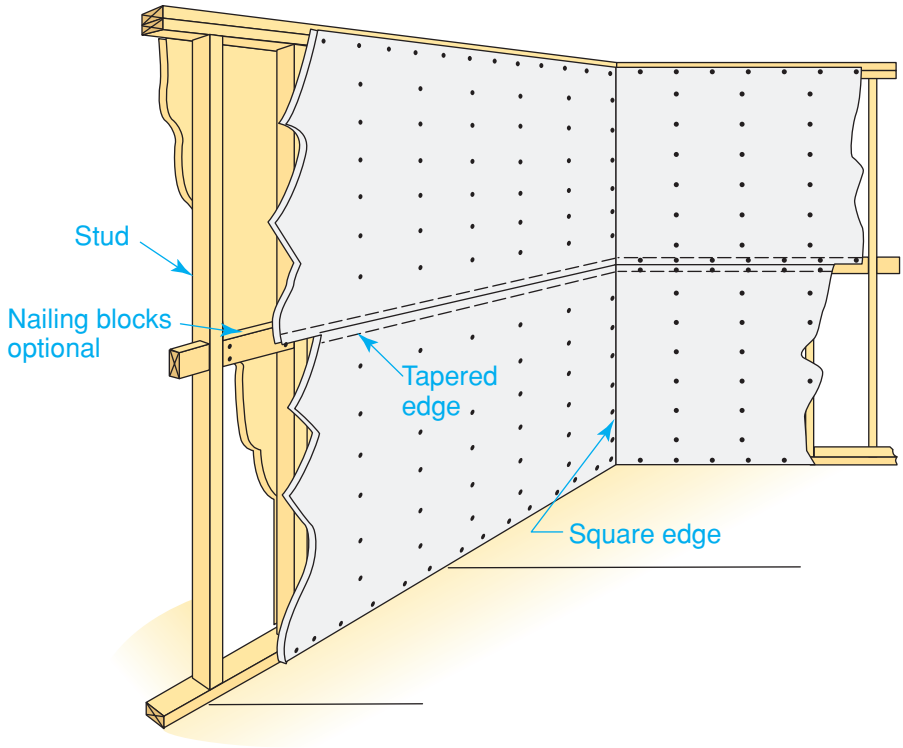

Figure 32-12 Horizontal Application
Optional Blocking Drywall can be installed horizontally on walls. Blocking behind the horizontal joint is optional.

- The strongest dimension of the panel runs across the studs.
- Horizontal joints are at a convenient height for finishing.

Fastener Spacing

Drywall can be installed using nails or screws. Nails are inexpensive and install quickly, but screws provide a much stronger connection. Where an even stronger connection is desired, a bead of construction adhesive can be run along framing members just before a sheet is installed. Using adhesive reduces the number of fasteners that must be installed. The recommended spacing for fasteners is shown in Table 32-1 on page 924.

Framing Flaws

Wall studs and ceiling joists must be in alignment to provide a smooth, even drywall surface. In the case of wood framing, bowed or twisted studs should not be used because the drywall will not seat properly, as shown in **Figure 32-13**. In addition, the framing lumber must have a low moisture content to prevent *nail pops*. These result if wood framing members dry out and shrink away

Figure 32-13 Twisted Framing
What to Watch For Drywall must fit tightly against framing. **A.** A twisted stud increases the possibility of nail pops. **B.** A properly fastened connection. Note the slight dimple around the nail head.

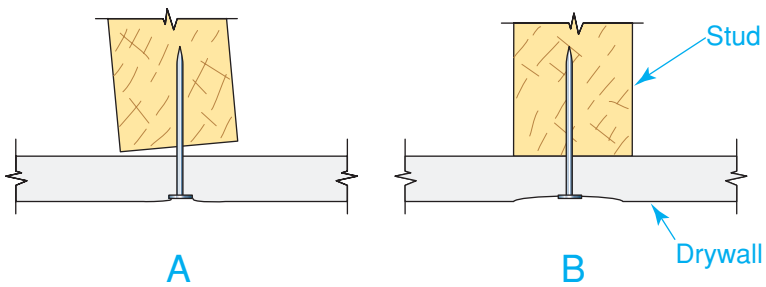

Builder's Tip

DEALING WITH WOOD SHRINKAGE Do not attach drywall panels directly to the face of wide dimensional lumber such as floor joists and headers. Instead, "float" panels over them (do not nail directly into the wood). Otherwise, shrinkage across the width of the lumber may cause the drywall to crack or cause nail pops in its surface.

from the nails. This can cause the nail head to pop above the drywall surface, causing a bump. Nail pops are greatly reduced if the moisture content of the framing is less than 19 percent when the drywall is applied. The use of screws nearly eliminates the problem.

Another type of framing problem that can interfere with drywall is misaligned blocking or bridging, as shown in **Figure 32-14**. This prevents the drywall from lying flat. This can damage the drywall as it is fastened. Before installing drywall, inspect the framing and fix any such problems.

In the case of houses framed with steel studs, many of the details for drywall support and placement are the same as those applied to wood framing. However, some factors are different. Only screws can be used to install drywall on steel framing, as shown in **Figure 32-15**. The type of screw is different than the one used for wood framing.

Another factor that differs is the order in which sheets are installed around a room. With steel framing, it should follow a particular plan. The sheets must be installed in a particular direction as the installer moves around the room. This direction depends on which way the stud flanges are facing. Plan the work so that drywall panel edges are screwed first to the open (unsupported) side of a stud, as shown in **Figure 32-16**. The edge of the next panel should then be screwed to the web side of the stud. This prevents the open side from deflecting as the screws are driven, which would result in uneven joints.

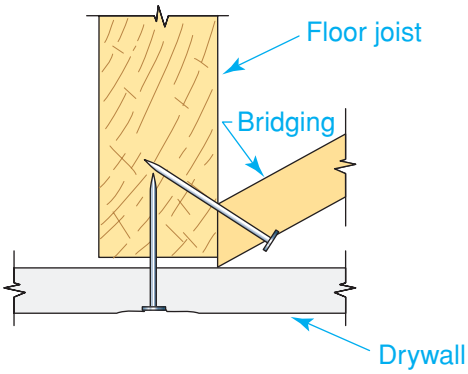

Figure 32-14 Misaligned Blocking
Always Check the Framing This bridging, which projects beyond the edge of the joists, prevents the back of the drywall from being brought into contact with the nailing surface. A puncture can occur.

Trim Accessories

In order to prepare drywall for finishing, any trim accessories should be installed. Accessories are vinyl or metal products that

Figure 32-15 Drywall and Steel Framing
Screw Gun This contractor is installing drywall over metal framing using a drywall screw gun.

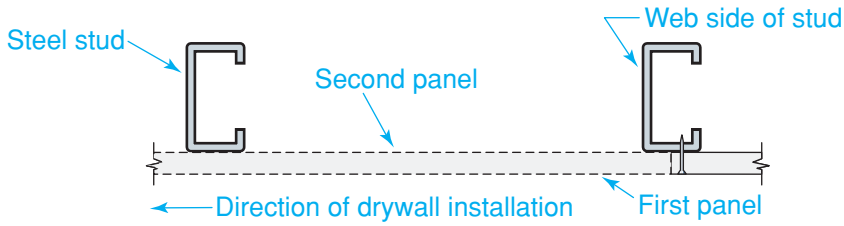

Figure 32-16 Order of Installation
Plan the Job Drywall should be fastened to steel studs by working around the room in one direction only.

protect corners, decorate wall intersections, or conceal rough edges. The most common accessory is corner bead. This is a shaped length of vinyl or metal that is nailed or screwed over outside corners. Metal corner bead can also be attached by using a special tool that clinches the edges of the bead to hold it in place. Corner bead protects a corner and provides an even, smooth edge that makes the corners easier to finish.

Corner bead is often V-shaped so that it forms a 90° corner when it is installed. However, in some areas, it is common to use bead that has a rounded surface. This is sometimes called *bullnose corner bead*. Large-radius bullnose gives the corners a look similar to that of adobe walls. Smaller radius bullnose gives the walls the look of plastered walls. Segmented bead is another type of corner bead. It is used to finish off the edges of arches and similar curved surfaces.

Finishing Drywall

Why is good ventilation important when working with joint compounds?

After corner bead and other accessories have been installed, joints between the panels and at inside corners are filled in a multi-step process called *taping the joints*. In this process, layers of joint compound are applied over a single layer of perforated paper joint tape. Joint tape reinforces the joint as shown in **Figure 32-17**. When the last layer of joint compound dries, it must be sanded smooth.

JOB SAFETY

SANDING DUST Joint compound sanding dust may contain harmful amounts of silica. Silica lodged in your lungs can lead to serious health problems such as cancer or silicosis (see Chapter 3). Limit your exposure to drywall dust by wearing a NIOSH-approved dust mask. Use a pole sander whenever possible instead of sanding by hand. The pole increases the distance between the worker and the sanding surface. The use of a vacuum-based sanding system can reduce dust exposure by 80 percent or more.

Go to **glencoe.com** for this book's OLC for more on job safety.

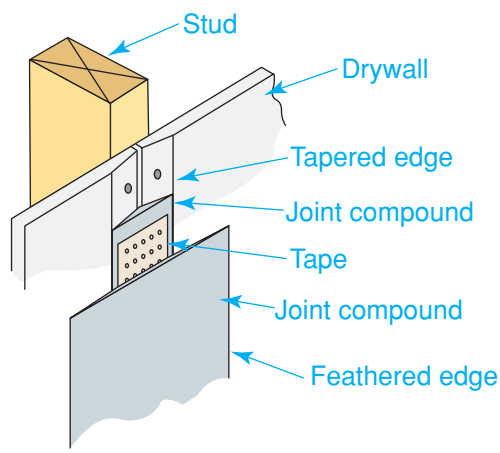

Figure 32-17 Taping a Joint
Layers over Layers The tapered edge of the drywall is filled with joint compound and tape. Additional joint compound is then applied and feathered out to provide a smooth surface.

Mathematics: Calculation

Estimate Drywall Panel Calculate the number of 4×8 drywall panels necessary to drywall a room measuring 12' × 14' with 10' high ceilings.

Starting Hint First determine the square footage of the walls.

A method for taping joints, inside corners, and covering nail dimples using all-purpose joint compound and paper reinforcing tape is described in the Step-by-Step Application on the next page. At the same time that joints are taped, joint layers of joint compound are applied to accessories such as the corner bead.

Estimating and Planning

CERTIFICATION PREP

This estimating and planning exercise will prepare you for national competitive events with organizations such as SkillsUSA and the Home Builder's Institute.

Estimating Drywall Materials

Estimating and "Figuring Solid"

The amount of materials required for a room is based on the square footage of walls and ceilings to be covered. Contractors typically calculate the square footage and translate that into the number of panels. Each 4×8 panel represents 32 sq. ft, and each 4×10 panel represents 40 sq. ft. When calculating square footage, walls are often "figured solid." That means that the overall square footage of the wall is calculated without subtracting for door and window openings. This is done partly to simplify calculations and partly because the large cutouts required for doors and windows are generally considered waste. These pieces are often difficult to reuse elsewhere in the project. However, if a wall contains a large picture window, the estimator may decide to subtract its area from the overall square footage of the wall.

Sheets

To determine square footage, multiply room perimeter by room height. (Obtain this information from the plans.) Do not subtract door and window openings from the figure. This provides a small allowance for waste. For example, a 10' × 12' room with 9' high ceilings would contain 516 sq. ft.:

Walls: 12 + 12 + 12 + 12 = 44 ft.

44 × 9 = 396 sq. ft.

Ceiling: 10' × 12' = 120 sq. ft.

396 + 120 = 516 sq. ft.

Each 4×8 drywall sheet covers 32 sq. ft., so the total number required for this room would be approximately 17 sheets:

516 ÷ 32 = 16.12

Fasteners

The quantity of nails is estimated by pounds per 1,000 sq. ft. of drywall. For example, ½" dry-wall requires 4.5 lbs. per 1,000 sq. ft. when applied to wood framing 16" OC. The room in our example would need about 2.5 lbs.:

516 ÷ 1,000 = 0.516

0.516 × 4.5 = 2.32 lbs.

Joint Treatment

To finish 1,000 sq. ft. of drywall, 370 lineal feet of joint tape and 138 lbs. of ready-mixed all-purpose joint compound or 83 lbs. of conventional drying-type powder are required.

To determine the quantities, divide the total square footage of wall and ceiling by 1,000. Then multiply this figure by the amounts per 1,000 sq. ft.:

516 ÷ 1,000 = 0.516

370 × 0.516 = 190.9 l.f. of joint tape

138 × 0.5163 = 71.2 lbs. of all-purpose joint compound

Step-by-Step Application

Finishing Drywall The following describes the use of all-purpose joint compound and paper reinforcing tape. Using other products would mean a change in the order of steps. Also, drywall contractors use specialized tools that make the work go faster.

TAPING FLAT JOINTS

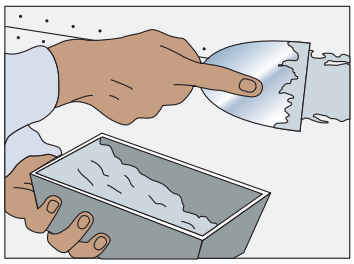

Step 1 Use a 5" wide taping knife and firm pressure to force compound into the joint. Scoop the compound from a mud box.

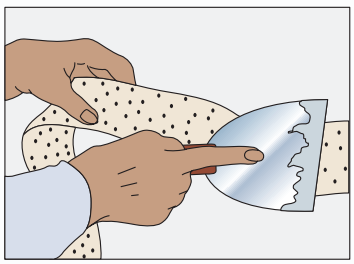

Step 2 Press joint tape into the fresh compound with a 6" or 8" taping knife until the excess compound is forced through the holes in the tape.

Step 3 Immediately cover the tape with additional compound, **feathering** (smoothing) the outer edges so there are no ridges.

Step 4 After the first layer of compound has dried, apply a second coat, using a wider knife.

Step 5 For best results, apply a third coat, feathering the edges beyond the second coat.

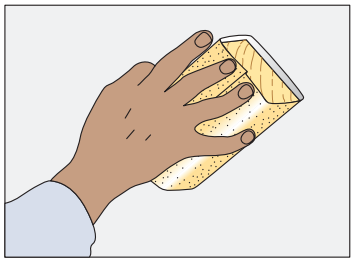

Step 6 After the final coat is completely dry, sand the joint smooth and even with the wall surface. Use a pole sander or vacuum sander whenever possible.

TAPING CORNERS AND ANGLES

Step 1 For an inside corner, apply joint compound along both sides of the corner.

Step 2 Cut joint tape to the length of the corner. Fold the tape lengthwise down the center and crease it to form a right angle.

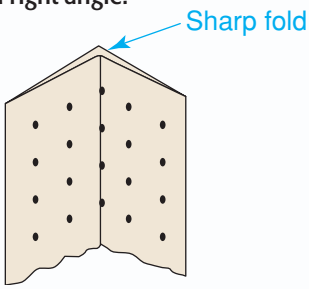

Step 3 Where drywall meets at angles that are not 90°, angled trim accessories can be used instead of standard corner bead. Another method is to use metal-reinforced paper tape. This is installed much as standard tape, but a thin strip of metal adhered to the tape on both sides of the crease helps to keep it straight when it is applied over joints that are not 90°.

Step 4 Press the tape into the compound and follow Steps 2 through 5 for flat joints.

Step 5 For an outside corner, apply compound over the edges of the corner bead on both sides. Joint reinforcement tape is not necessary.

Step 6 Apply more layers as necessary, always feathering the edges.

Step 7 Sand the joint smooth. Be careful not to sand through the compound. This will damage the paper.

FILLING DIMPLES

Nails and screws must be driven slightly below the surface of the drywall. The resulting "dimples" must be filled with joint compound.

Step 1 To hide dimples, fill them with joint compound using a 6" knife. Apply additional layers as necessary after each earlier layer dries.

Step 2 Sand the dimple areas smooth when they are dry.

Go to **glencoe.com** for this book's OLC for additional step-by-step procedures, applications, and certification practice.

Table 32-2: Approximate Drying Time for Joint Compound									
Temperature (°F)	Relative Humidity								
	0%	20%	40%	50%	60%	70%	80%	90%	98%
40°	28H	34H	44H	2D	2½D	3½D	4½D	9D	37D
60°	13H	16H	20H	24H	29H	38H	2½D	4½D	18D
80°	6H	8H	10H	12H	13½H	19½H	27H	49H	9D
100°	3H	4H	5H	6H	8H	10H	14H	26D	5D

Note: H = Hours, D = Days (24 hours).

Temperature and humidity have a direct effect on the drying time of drying-type joint compounds (setting-type compounds dry by chemical reaction). Each layer must be thoroughly dry before more coats are applied. In all cases, good ventilation speeds drying, and increased humidity slows drying. **Table 32-2** shows the approximate drying periods for joint compound under different temperature and humidity conditions.

Surface Textures

The surface of standard drywall is smooth once it had been taped, sanded and primed, but various products can be used to give it a decorative texture. For example, ceilings are often sprayed with a product containing fine, medium, or coarse polystyrene aggregrate. This results in a heavily textured surface creating what is sometimes called a *popcorn ceiling*. This finish masks minor surface defects and is usually left unpainted. Other finishes can be used on walls as well as ceilings. Some are created with joint compound applied with a flat trowel. This is sometimes referred to as skim-coating.

Section 32.1 Assessment

After You Read: Self-Check

1. Along which dimension is a drywall panel strongest?
2. *Type-X* and *Type-C* refer to which kind of drywall?
3. Which type of compound would be used when fast curing is important?
4. What type of drywall can be used where walls will receive very hard wear?

Academic Integration: Mathematics

5. **Estimating Drywall** Estimate the number and cost of 4 ft. by 8 ft. sheets of drywall at $5.55 each needed to cover the walls and ceiling of a 58 ft by 16 ft. rectangular recreation room with an 8 ft. high ceiling.

   Math Concept When solving a word problem, turn the wording into a numeric equation. You may need more than one equation.

Go to **glencoe.com** for this book's OLC to check your answers.

Section 32.2

Plaster

Types of Plaster

How can the use of plaster slow the construction process?

Plaster is a material that can be applied to various substrates to form a dense, hard surface. It can also be given a wide variety of textures. Because it is applied as a wet material, it must dry before other work in the house can continue. This can be inconvenient when construction must be finished quickly. In fact, drywall was developed because of the need to provide a similar looking material that did not require as much drying time. However, many builders and homeowners feel the inconvenience of installing traditional plaster is worthwhile. That is primarily because its surface is harder and more durable than drywall.

Veneer Plaster

One variation of traditional plastering systems is called *veneer plaster.* **Veneer plaster**, also called thin-coat plaster, is a specially formulated gypsum plaster that is applied to a type of drywall called *gypsum base.* Gypsum base is sometimes called *blue board* because of the color of its face paper. It comes in 4' × 8' sheets. The moisture-absorbent face paper of gypsum base is treated to provide an excellent bond with the plaster. The plaster is applied by trowel either in one layer 1/16" to 3/32" thick or in two layers totaling 1/8".

Traditional Plaster

Traditional plaster, sometimes referred to as lath-and-plaster, is a wall and ceiling material made from sand, lime or prepared plaster, and water. Plaster is applied by skilled contractors who specialize in its installation. Many of the tools used in plastering are similar to those used for drywall. However, unlike veneer plaster, traditional plaster must be applied to a base material called **lath**. Lath is any base material for plaster that has qualities that encourage the plaster to stick to it.

In old houses, lath consisted of slender wood strips nailed perpendicular to framing members. Layers of plaster were then applied to the closely spaced lath and forced into gaps between the strips. As the plaster dried, it adhered to the back side of the lath. This provided a strong mechanical connection, sometimes called a *keyed connection.* Remodelers frequently find wood lath when they work on old houses, but it is no longer used for new construction. The most common types of lath used today are made of gypsum panels or expanded metal.

Materials & Techniques

How are drywall and plaster edges similar?

Before the development of drywall, plaster was the most common method for finishing interior wall and ceiling surfaces. Drywall is now the most common system, but plaster materials and techniques have continued to evolve.

Gypsum Lath

Gypsum lath has a core of gypsum surrounded by a multilayered paper face specifically designed for plaster. Gypsum lath comes in 16" by 48" panels with square edges. Gypsum lath is applied horizontally across the framing members. For stud or joist spacing of 16" OC, a 3/8" thickness is used. For 24" spacing, the lath should be 1/2" thick. Where joints do not fall on framing members, a formed metal clip can be used to support and align joints.

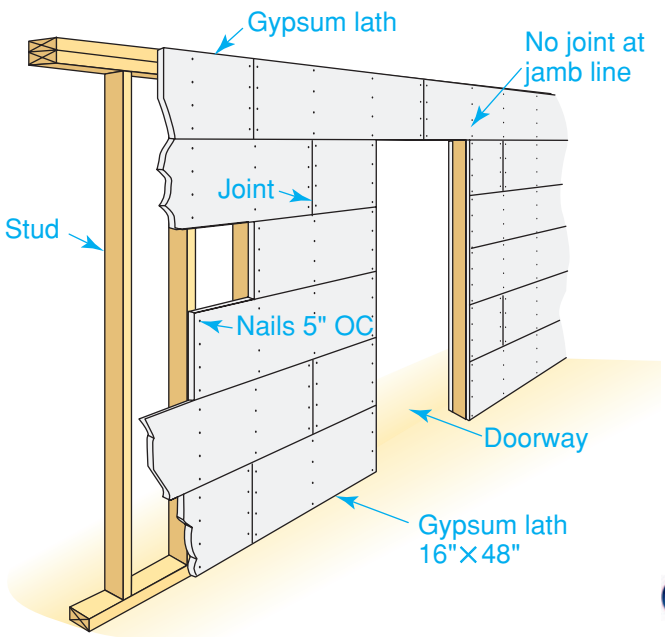

Figure 32-18 Details for Gypsum Lath
Staggered Joints Gypsum lath is nailed or screwed horizontally across studs. Note that the joints are staggered and that there is no joint at the jamb line in the doorway.

Over wood studs, lath can be attached with either flat head 13-gauge gypsum-lathing nails 1⅛" long or 16-gauge galvanized staples. The staples have a flat 7⁄16" wide crown and 1" divergent-point legs. Gypsum lath can be secured to metal studs by 1" long type-S screws.

Vertical joints should be made over the center of studs or joists. The nails should be spaced 5" OC, or four nails for the 16" height, and used at each stud or joist crossing. Joints over heads of openings should not occur at the jamb lines, as shown in **Figure 32-18**.

Metal Lath

Metal lath is made from sheet metal. The metal is slit and expanded during manufacture to form various patterns, such as flat ribs or a diamond mesh. Openings in the lath create gaps for the plaster to "grip," as shown in **Figure 32-19**.

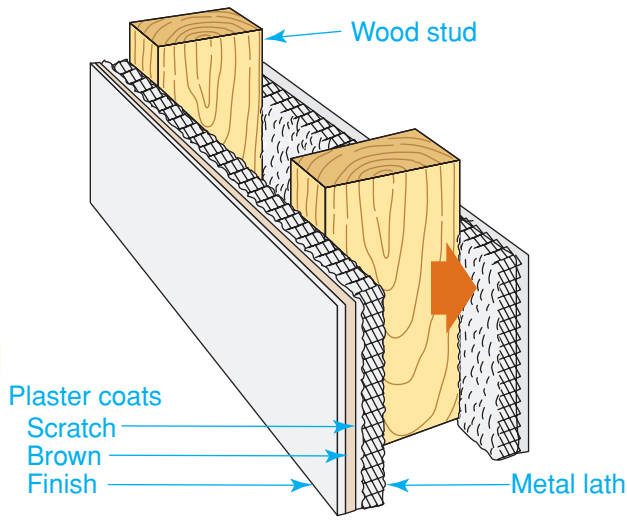

Figure 32-19 Details for Metal Lath
Three-Coat Plaster Work A cross section of plaster on metal lath showing the buildup of the various coats. Notice how the plaster is keyed to the metal lath in the area indicated by the arrow.

Metal lath is usually 27" × 96" in size and galvanized to resist rust. It is usually installed on studs or joists spaced 16" OC.

Metal lath is often used around tub recesses and other bath and kitchen areas, even if the gypsum base is installed elsewhere. In such cases, Portland cement plaster is sometimes used instead of gypsum plaster. It provides a substrate more suitable for ceramic tile. When used in wet areas, metal lath must be backed with water-resistant sheathing paper.

Trim Accessories

Like drywall edges, the edges of a plastered wall can be covered and protected by trim accessories. These accessories also provide a ground. A **ground** is a material permanently or temporarily attached to a surface to be plastered. It provides a straight edge and helps the plasterer gauge the thickness of the plaster. It may be made of wood but is most often made of metal. Common accessories include metal corner bead, Cornerite, casing bead, and reinforcing lath.

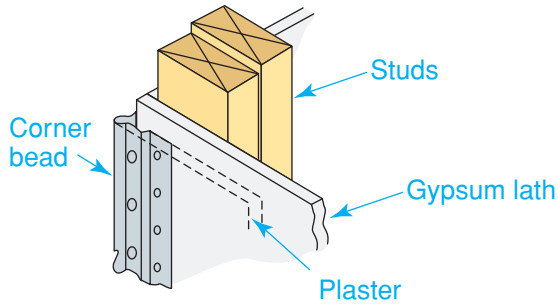

Figure 32-20 Corner Bead
Corner Protector A corner bead is installed at outside corners to serve as a leveling edge when the plaster is applied. It also protects the corner.

- *Metal corner bead* is required at all outside corners (see **Figure 32-20**). It has a solid galvanized metal edge and expanded flanges. Each flange is approximately 2⅞" wide.
- *Cornerite* is an angled length of metal lath that is used to strengthen interior corners (see **Figure 32-21**).
- *Casing bead* is used around wall openings. It is also used where plaster meets other finishes. It can eliminate the need for wood trim around doors and windows.
- *Reinforcing lath* is a flat length of expanded lath 4" or 6" wide (see **Figure 32-22**). It is used to reinforce areas that might crack, such as corners around doors and windows.

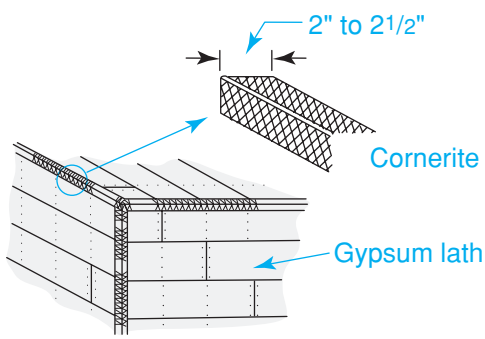

Figure 32-21 Cornerite
Reinforcer Cornerite is installed at inside corners for reinforcement and to limit plaster cracks.

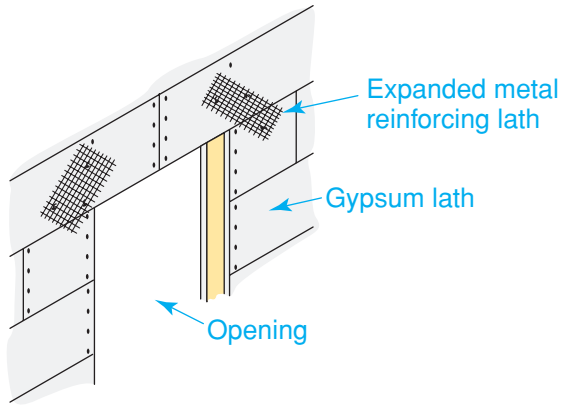

Figure 32-22 Reinforcing Lath
Crack Resistor Expanded metal lath is used to help limit plaster cracks.

Installation

Plaster is applied in three layers over metal lath. It is applied in two or three layers over gypsum lath. This process is called three-coat plaster work. The minimum thickness over ⅜" gypsum lath should be about ⅜". Three-coat plaster work (see Figure 32-19) is usually at least ¾" thick.

The first plaster coat is called the *scratch coat.* After a slight set has occurred, the plaster is scratched to ensure a good bond with the second coat. The second coat is called the *brown coat,* or leveling coat. The plaster is brought to level during its application. The third coat is the *finish coat.* It provides the finished wall surface. Two-coat work over gypsum lath, sometimes called *double-up work,* combines the scratch and brown coats.

Plaster receives one of two basic finishes: the sand-float and the putty finish. For the sand-float finish, lime is mixed with sand, which produces a texture. The putty finish, made without sand, is smooth. It is common in kitchens and bathrooms where a gloss or enamel paint will be used.

Plastering should not be done in freezing weather without a source of constant, even heat. In normal construction, portable heating units are sometimes in place before plastering begins.

Estimating and Planning

CERTIFICATION PREP

This estimating and planning exercise will prepare you for national competitive events with organizations such as SkillsUSA and the Home Builder's Institute.

Gypsum Lath, Nails, and Labor

Materials and Labor

Gypsum lath is packaged in bundles of six 16" × 48" pieces. A standard lath bundle therefore contains approximately 32 sq. ft. of lath.

Step 1 See the floor plan below. To determine the number of bundles required, divide 32 into the total area to be covered. Suppose that the walls and ceiling of the room are to be finished with lath and plaster. Assume the ceiling is 8 ft. high. The total wall and ceiling area equals 798 sq. ft.:

Walls: $66 \times 8 = 528$

Ceiling: $15 \times 18 = 270$

$528 + 270 = 798$ sq. ft.

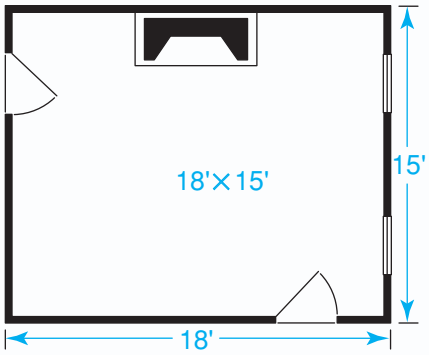

18 + 18 + 15 + 15 = 66'

Step 2 Divide the number of square feet to be covered by the number of square feet in a bundle of gypsum lath (32) for a total of 24.94, or 25 bundles of gypsum lath.

$$798 \div 32 = 24.94$$

Step 3 To estimate the amount of nails required for installing the gypsum lath, figure that 5 lbs. are needed for every 100 sq. ft. About 800 sq. ft. of lath are to be installed. Therefore, $8 \times 5 = 40$ lbs. of nails.

Step 4 A plasterer calculates the labor cost of a job by the number of square yards to be covered. Convert the square feet in the room to square yards by dividing by 9 (1 sq. yd. equals 9 sq. ft.). In our example, $798 \div 9$ equals 88.66, or 89 sq. yd. This figure would then be multiplied by the plasterer's labor rate.

Estimating on the Job

Suppose a 9' by 12' room with 9 ft. ceilings must be plastered. How much gypsum lath and nails will be needed? If a plasterer charged $22 per square yard, how much would the labor cost?

Section 32.2 Assessment

After You Read: Self-Check

1. Name three types of lath used as a base for plaster.
2. What is a plaster ground?
3. What is Cornerite and what is it used for?
4. Name the two plaster finishes.

Academic Integration: English Language Arts

5. **Gypsum** One of the most common types of lath used today is gypsum. Research the history of the use of gypsum as a building material. Write a two-paragraph summary about your findings.

Go to glencoe.com for this book's OLC to check your answers.

Section 32.3

Suspended & Acoustical Ceilings

Suspended Ceilings

In what remodeling situations would suspended ceilings be especially useful?

Drywall and plaster are the most common materials used for residential ceilings. However, they prevent access to the areas above. If ducts and water pipes are routed between floor joists, a suspended ceiling is sometimes installed. A **suspended ceiling** consists of panels held in place by a metal or plastic grid, as shown in **Figure 32-23**. A suspended ceiling conveniently covers bare joists, exposed pipes, and wiring. Panels can be removed easily for access to valves, switches, and controls. A suspended ceiling may also be used to lower the ceiling level. This is sometimes done when walls are unusually high. Recessed fluorescent lighting can be installed at most locations in a suspended ceiling.

Suspended ceilings are widely used in commercial and light commercial construction. In houses, they are most common in finished basements. They are also common in commercial construction. In commercial construction, the exact layout of a suspended ceiling may be determined by a special drawing called a *reflected ceiling plan.* However, this drawing is rarely necessary in residential construction.

Figure 32-23 Suspended Ceiling
Hanging Ceiling A suspended ceiling consists of flat or profiled panels loosely supported by a ceiling grid.

Arnold & Brown

Step-by-Step Application

Installing a Suspended Ceiling Be sure to plan the layout before you begin. This can be done by sketching a basic grid plan using graph paper or by using online planning software. Always follow the ceiling manufacturer's instructions.

Step 1 Nail or screw the wall molding to the walls at the height desired for the ceiling. A laser level is the fastest and most accurate way to align wall molding, but a standard level and chalkline can also be used. At inside corners, cut the vertical leg of each molding to fit into the corner, but lap one lower leg over the other. Form outside corners by mitering the wall moldings together or by overlapping them.

Step 2 Determine where the main runners will go based on your grid plan sketch. Mark the location of runners and the hanger-wire screws that will support them by snapping a chalk line across the ceiling joists. Drive screws 4' OC (or as recommended by the ceiling manufacturer) into the bottom edge of joist at the chalked lines. The screw should be centered. Now loop a length of hanger wire through every screw and wrap it back around itself at least three times. Allow the wires to hang loose for now. They will be used in a later step to support the main beams.

Step 3 Check the ceiling layout for the location of the first main beam and the first row of cross tees. Stretch a string across the length of the room and another across the width to represent these locations. Keep these reference strings very tight. Check them with a framing square to ensure that they meet at a 90° angle. Adjust them as needed.

Step 4 Measure up ⅞" from the bottom of the wall molding under each joist that carries hanger nails. Drive a nail into the wall at each location. Stretch leveling strings across the room between opposing nails and tie them to the nails. Now use pliers to make a sharp 90° bend in every hanger wire where it intersects a leveling string. When all the wires have been bent, remove the leveling strings. (Do not remove the two reference strings.)

Step 5 Cut the beams one by one to fit into place, starting at the appropriate guide string. Slip the ends of the hanger wires into existing holes or slots in the beams. Twist the end of the wire around the vertical portion to secure it. Repeat the process with the remaining beams.

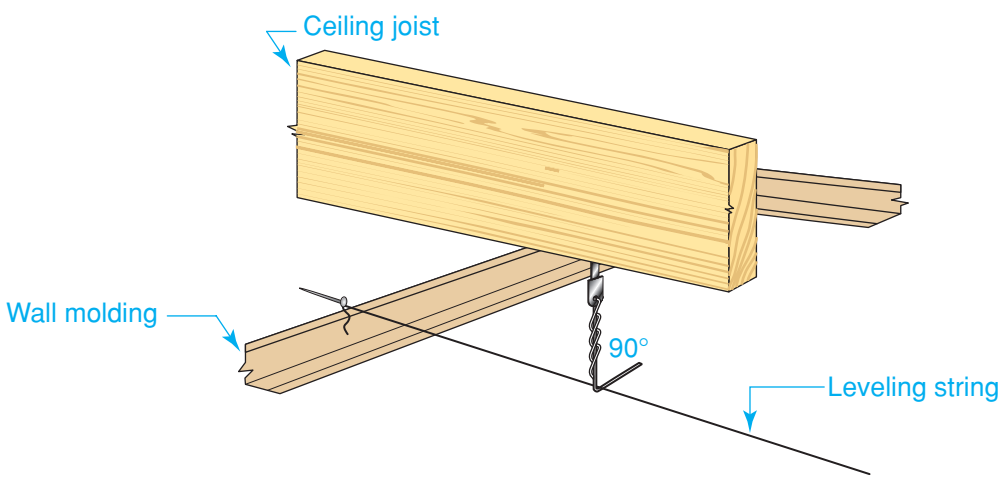

Go to **glencoe.com** for this book's OLC for additional step-by-step procedures, applications, and certification practice.

Step-by-Step Application

Step 6 Starting at the appropriate reference string, install the first row of cross tees between the main beams. Lock the ends of each cross tee into slots in the main beams. Install the remaining cross tees in the same way. Make sure they are spaced properly to accept the desired size of the ceiling panel.

Step 7 Measure each of the border ceiling panels individually. Cut each panel face up, using a sharp utility knife. After all the border panels are in place, slip the remaining ceiling panels into place. Take care when handling ceiling panels to avoid marring the surface. Handle the panels by the edges, keeping your fingers off the finished side as much as possible. Lightweight cotton gloves can be worn to prevent the panels from being smudged.

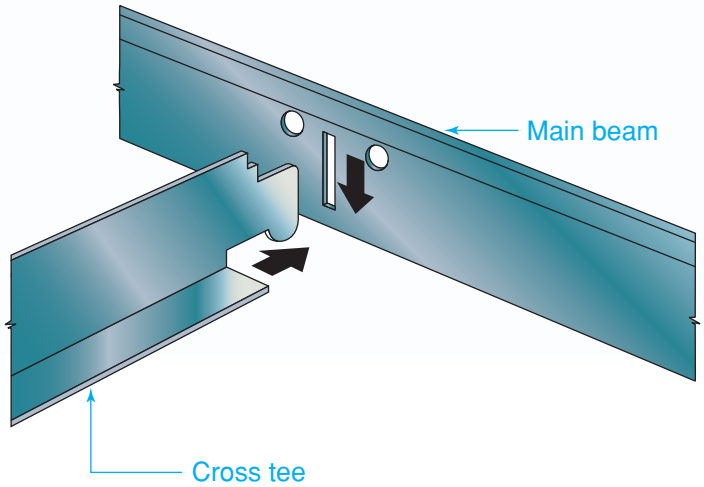

Go to **glencoe.com** for this book's OLC for additional step-by-step procedures, applications, and certification practice.

Materials

Ceiling panels are made of plastic or mineral board, which is a lightweight material. It consists of mineral components, binders, and inert filler materials, such as recycled newsprint and mineral wool. Each panel is 2' × 2' or 2' × 4'. The grid system that supports these panels includes main beams (sometimes called *runners*), cross tees, and wall molding. Main beams are usually 12' long and are spaced 2' or 4' OC. Cross tees are installed at right angles to the main beams. Grid components are made of metal or vinyl, and come in various configurations. One type is shown in **Figure 32-24**.

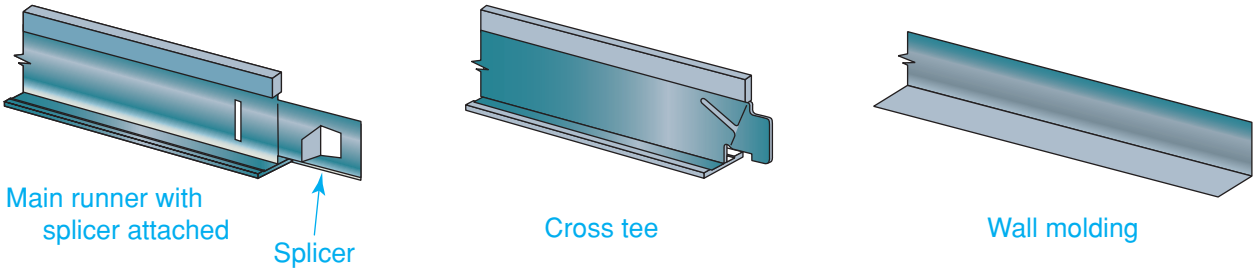

Figure 32-24 Grid Components
Basic Parts The main runners support cross tees. Wall molding runs along the perimeter of the ceiling.

Installation

Before installing a suspended ceiling, establish the finished ceiling height. In general, the top edges of the grid system must be at least 3" below the bottom of the ceiling framing. This space is necessary for the insertion of the panels after the grid system is in place.

A suspended ceiling looks best if the panels on opposite sides of the room are the same width, as shown in **Figure 32-25**. To achieve this, you must accurately plan the layout of the system. Manufacturers provide planning instructions that include layout details. Follow these instructions carefully. Once layout has been planned, installation can begin.

Figure 32-25 Ceiling Layout

Planning the Ceiling Layout details for a 10'-4" × 18'-8" suspended ceiling using 24" × 48" panels.

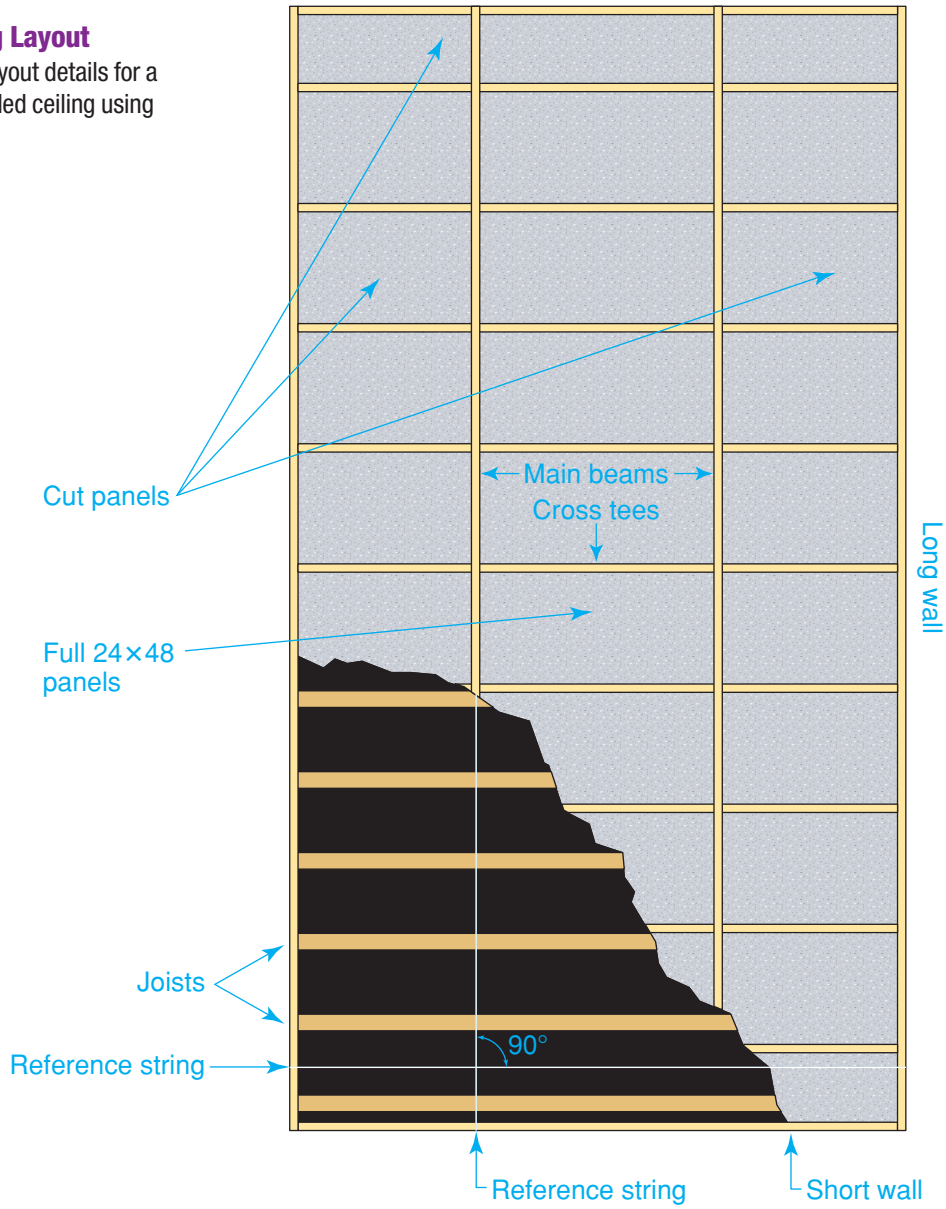

Acoustical Ceilings

Which installation method do you think would be faster?

In rooms without enough height to hang a suspended ceiling, an acoustical ceiling may be installed instead. An **acoustical ceiling** consists of panels glued directly to the ceiling surface or stapled to wood furring strips nailed to the ceiling joists.

The panels consist of 12" × 12" squares, or sometimes 12" × 24" rectangles. Each panel has a tongue on two edges, and a groove on two edges. This allows the panels to interlock. Panels are typically made of fiberboard. The surface may be embossed or textured. Some panels are made specifically to reduce sound levels in a room.

There are two methods for installing acoustical ceiling panels: the mastic method and the staple method.

Mastic Method

If the ceiling is flat and in good shape, each panel can be adhered directly to the ceiling surface. A dollop of mastic or construction adhesive placed near each corner and in the middle holds the panels in place.

Staple Method

Where a ceiling is uneven, or where there is no existing ceiling surface, panels must be stapled to wood furring strips. The strips are nailed to the joists and shimmed so that they are in the same plane.

Section 32.3 Assessment

After You Read: Self-Check

1. What are the advantages of suspended ceilings?
2. What materials are ceiling panels made of?
3. What supports a suspended ceiling grid?
4. Name the two methods for installing acoustical ceiling panels.

Academic Integration: Mathematics

5. **Determine Border Dimension** Determine the length of the top and bottom borders shown in this acoustical ceiling if you are using 4' × 2' tile.

Math Concept To find the dimension of equal borders in an acoustical ceiling within a single axis, subtract the same dimension of the shape and divide the remainder by two.

Step 1: Subtract the remaining amount of length (5'-2") from the total length to determine the total length of the borders (9'-2' − 4' = 5'-2" or 62").

Step 2: Divide the remainder by 2 to determine the length of each border. Convert feet and inches into inches if this is helpful (5'-2" = 62").

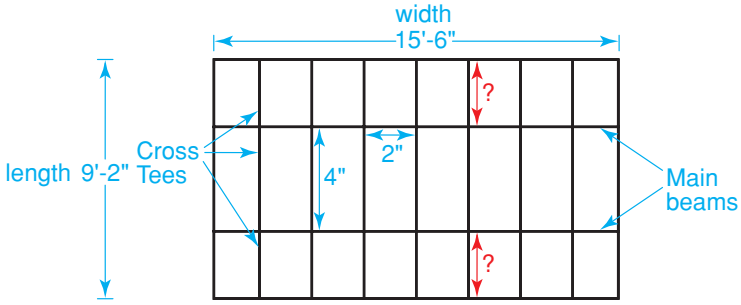

Go to **glencoe.com** for this book's OLC to check your answers.

CHAPTER 32

Review and Assessment

Chapter Summary

Section 32.1

Drywall is made of a gypsum core covered with special paper. It comes in three basic types: standard drywall, fire-code drywall, and moisture-resistant drywall. There are also specialty drywalls. Joint compound and tape are used to fill joints. Panels can be installed vertically or horizontally. Installation differs for wood framing and steel framing.

Section 32.2

Plaster must dry before other work can progress. This can slow the construction schedule. Plaster is applied over gypsum or metal lath in two or more layers. It can be given a smooth or textured finish.

Section 32.3

Suspended ceilings consist of panels held in place by a metal or plastic grid. They cover joists, pipes, and wiring. Suspended ceilings are also used to lower a ceiling or to provide sound insulation.

Review Content Vocabulary and Academic Vocabulary

1. Use each of these content vocabulary and academic vocabulary words in a sentence or diagram.

Content Vocabulary

- corner bead (p. 919)
- feathering (p. 931)
- veneer plaster (p. 933)
- lath (p. 933)
- ground (p. 934)
- suspended ceiling (p. 937)
- acoustical ceiling (p. 941)

Academic Vocabulary

- stable (p. 916)
- enables (p. 922)

Speak Like a Pro

Technical Terms

2. Work with a classmate to define the following terms used in the chapter: *face paper* (p. 916), *liner paper* (p. 916), *substrate* (p. 916), *joint compound* (p. 918), *setting compound* (p. 918), *topping compound* (p. 918), *nail pops* (p. 927), *popcorn ceiling* (p. 932), *metal corner bead* (p. 935), *Cornerite* (p. 935), *casing bead* (p. 935), *reinforcing lath* (p. 935), *scratch coat* (p. 935), *brown coat* (p. 935), *finish coat* (p. 935), *double-up work* (p. 935).

Review Key Concepts

3. Compare the different types of drywall and how they are used.

4. List the properties of fire-code drywall.

5. Explain how to repair a nail pop.

6. Describe the safety and health precautions that need to be taken when installing drywall.

7. List the basic elements of three-coat plaster work.

8. Demonstrate how to install a suspended ceiling.

Critical Thinking

9. Explain Which rooms in a house would moisture-resistant drywall be most appropriate?

Academic and Workplace Applications

STEM Mathematics

10. Estimating Cost To finish 1,000 sq. ft. of drywall, 370 lineal feet of joint tape and 138 pounds of ready-mixed all-purpose joint compound are needed. Tape comes in rolls of 250 ft. at $1.45, and joint compound comes in drums weighing 61.7 pounds each at $8.98. How much will tape and compound cost for the walls and ceiling of a rectangular cafeteria that is 65 ft by 45 ft with a wall height of 9 ft.?

Math Concept Solving some problems requires many steps. Take each step one at a time and write down your calculations as you go.

Step 1: Multiply the length times the width of the ceiling to find its area.

Step 2: Compute the perimeter of the room and multiply by the height of the wall to find the area of the walls.

Step 3: Add the two areas and divide by 1,000 sq. ft.

Step 4: Multiply the result from Step 3 by 370 ft., and then divide the result by 250 ft. Round up to the nearest whole number to find the number of rolls of tape needed.

Step 5: Multiply the result from Step 3 by 138 and divide by 61.7. Round up to find the number of drums of joint compound needed.

Step 6: Multiply to find the costs of each component and add to find the total cost of the materials.

21st Century Skills

11. Information Literacy Drywall panels must be securely fastened to wood or steel studs with special nails or screws. Discuss the properties and characteristics of drywall nails and screws that make them effective fasteners.

21st Century Skills

12. Collaboration Skills Each phase of the construction process has the potential to affect the processes that follow. Write two to three sentences explaining how the work of framing carpenters can affect the work of drywall installers.

Standardized TEST Practice — CERTIFICATION PREP

True/False

Directions Read each of the following statements carefully. Mark each statement as either true or false by filling in T or F.

(T) (F) **13.** In commercial construction, the exact layout of a suspended ceiling may be determined by a special drawing called a reflected ceiling plan.

(T) (F) **14.** Traditional plaster, sometimes referred to as lath-and-plaster, is a wall and ceiling material made from water and granite, coral or prepared plaster.

(T) (F) **15.** Drywall is never attached directly to framing.

TEST-TAKING TIP

If you are unsure about an answer, eliminate the choices you know are incorrect. Then make your best guess from the remaining answer choices.

*These questions will help you practice for national certification assessment.